IRTE
OFFICIAL JOURNAL
TRANSPORT ENGINEER
APRIL 2022

PREVIEW COMMERCIAL VEHICLE SHOW

IN THIS ISSUE

› Profiled: RHCV's Jess Simmons; J&M Morgan Engineering

› Maintenance models for municipal vehicles



OFF-GRID GAS

Tapping a renewable power source for transport

ZF | AFTERMARKET



Modular ABS sensors

Our new modular solution consists of: two different types of ABS sensors with standard KEA connector, one short cable plus extension cables which come in various lengths, together with an ever-growing range of adapters that cover all popular electronic control units (ECUs).

More than 400 OE references can be replaced with just two ABS sensor types, ten extension cables and eight adapters.

Identify your modular ABS sensor with online configurator

www.wabco.info/i/1977

- Exchange of affected components only
- Reduced stock at distributors
- 8 adapters covering hundreds of devices
- Time efficient increased uptime
- No OE-references needed

www.wabco-customercentre.com

WABCO

contents



REGULARS

05 Comment
07 News
38 Engineer to engineer
41 Product focus: tyres
42 Legal update

FEATURES

12 Off-grid gas
GASEOUS FUELS
Fuel is being sourced from waste PLUS: the IVECO view

16 Organic goodness?
GASEOUS FUELS
Users of home-brew gas still need to take care it is safe for their vehicles

19 Common range
GASEOUS FUELS
Cummins is launching an engine modification to run on hydrogen

20 Van brakedown
MOT FIRST-TIME PASS RATES
What can be done to reverse unacceptably high van MOT failures, with a focus on brakes

23 One-stop shop
MOT FIRST-TIME PASS RATES
Independent CV workshop J&M Morgan Engineering, profiled

24 Start your engines
CV SHOW
We preview this year's CV Show, being held at the NEC on 24-26 May

30 Shaking off the dust
MUNICIPAL
Local authorities are turning to outside contractors to maintain their vehicle fleets. Richard Simpson finds out why

33 All in the family
APPRENTICESHIPS: WORKING FOR THE FUTURE
Profile of third-generation trucker Jess Simmons, an apprentice at Midlands Renault dealer RH Commercial Vehicles

35 Stopping rollaway
ROAD SAFETY
Done correctly, coupling tractors and trailers should not pose a problem for any driver. But it only takes one slip to cause a major hazard

TRIED AND TESTED WHEEL SAFETY SOLUTIONS

Tested and accredited by TÜV SÜD, you can trust that our Checklock SQ wheel nut retainer comes from the original and best in wheel safety solutions for your vehicle or fleet.

Certified by TÜV SÜD





Tel: +44 (0)1524 271 200
sales@checkpoint-safety.com
www.checkpoint-safety.com

Checkpoint®
THE ORIGINAL AND THE BEST

FOR THE ROAD AHEAD



REGISTER NOW

Discover the latest and broadest range of equipment, innovation and technology available in commercial road transport.
See you at the Show.

REGISTER at cvshow.com

cvshow
the-cv-show
@TheCVShow
thecvshow

COMMERCIAL VEHICLE SHOW
24 – 26 MAY 2022 NEC BIRMINGHAM

Published by
The Society of Operations Engineers

President
Adam Fraser-Hitchen CEng FSOE

Chief Operating Officer
Daniel Moir

The Society of Operations Engineers is a licensed member of the Engineering Council.

Registered in England
Company No 3667147

Registered Charity
No 1081753
A Company Limited by Guarantee

Registered Office
22 Greencoat Place, London SW1P 1PR
Tel: 020 7630 1111
Fax: 020 7630 6677
Email: soe@soe.org.uk
www.soe.org.uk

Editor
Will Dalrymple
Email: will.dalrymple@markallengroup.com

Contributing Editors
Steve Banner, John Challen, Toby Clark, Laura Cork, Dan Gilkes, Peter Shakespeare, Richard Simpson, Chris Tindall, Lucy Radley, Brian Wall

Art Editor
Chris Charles

Production Manager
Nicki McKenna
Email: nicki.mckenna@markallengroup.com

Advertisement Manager
Craig Molloy
Email: craig.molloy@markallengroup.com
Tel: 01322 221144

Publisher
Jon Benson

Transport Engineer
is the official journal of the IRTE, a professional sector of the SOE.

Produced on behalf of the IRTE by
MA Business
Hawley Mill, Hawley Road, Dartford, Kent DA2 7TJ
Tel: 01322 221144
www.transportengineer.org.uk

Transport Engineer
is distributed free of charge to SOE members, dependent on membership sector. For non-members, the annual subscription rate (12 issues) is £79.50 UK and EU, or £81.50 airmail outside EU. For other SOE members, the discounted rate is £32.

Printed by
Pensord Press UK

ISSN
0020-3122

CPD APPROVED ACTIVITY

CPD MEMBER The CPD Certification Service

Some of the articles and guidance included in *Transport Engineer* may make a contribution to your personal CPD requirements.

Please read our privacy policy, by visiting http://privacypolicy.markallengroup.com. This will explain how we process, use and safeguard your data.

Views expressed in *Transport Engineer* are those of the writers and do not necessarily reflect the views of The Society of Operations Engineers or of MA Business.

© 2022 The Society of Operations Engineers

MA Business
Part of
Mark Allen

abc

Many roads

Heavy goods vehicles made up less than 5% of 2018 road traffic but accounted for 17% of road emissions. Climate change is real. It is a phenomenon in which we all have a duty to change our behaviour for the greater good of the UK and the world. How should the haulage industry view these changes?

The UK government's net zero ambition has to go beyond target setting of course (net zero by 2050, bans on the sale of non-zero-emission heavy goods vehicles by 2040). Policy and funding are also needed to make the change happen. Many would argue that the infrastructure required to achieve these targets remains inadequate. Some of you will have seen Guy Martin's 1,100-mile round trip from Grimsby to John O'Groats featured in the recent Channel 4 series 'Guy Martin: The World's Fastest Electric Car?' Guy concluded that electric vehicle recharging infrastructure is critical to our future, but is also a decade away from what is needed.

Even this might be optimistic. The country's diesel and petrol refuelling network grew gradually over more than 50 years. There are over 150 motorway services, not including dedicated truck stops, and another 8,000 fuel stations across the UK. Few are adequately equipped at the moment and each site will need investment in its own right.

The challenge is significant. The key is to approach the challenge in different ways – a combination of investment, behavioural change, exploitation of technology, and adopting global leading practice. The environmental demands on all aspects of engineering will undoubtedly characterise the careers of our new apprentices. Such change is incumbent on us all.

Professional engineering institutions such as IRTE, working closely with the SOE's Environmental PSC, must continue to offer engineering advice to government and the public to identify the many roads to net zero.



Adam Fraser-Hitchen
President, Society of Operations Engineers

To reach shortened URLs in the magazine – *www.is.gd/xxxxxx* – type the whole link into the address window of your web browser.

Stertil® KONI

HEAVY DUTY COMMERCIAL

VEHICLE LIFT SPECIALISTS



4-POSTLIFT



a member of the Stertil Group

SUPERIOR SOLUTIONS

- Deal direct with the World's number one heavy-duty manufacturer
- Bespoke service and extended warranty packages

FCA

FCA APPROVED FINANCIAL AND LEASING PACKAGES

GEA

www.stertil-koni.co.uk lifts@stertil.co.uk tel: 01604 662049

Mercedes-Benz begins UK sales of eActros



UK truck operators are now able to place the first orders for right-hand-drive versions of the battery-electric Mercedes-Benz eActros. It is now available to order as a 4x2 or 6x2 chassis, with deliveries to UK customers beginning in May.

Aimed at those engaged in heavy-duty, short-haul distribution, the vehicle produces zero tailpipe emissions and offers a range of up to 249 miles (400km). The range was determined internally in optimum conditions, including four battery packs after preconditioning in partially loaded distribution traffic without a trailer at 20°C outside temperature.

Mercedes-Benz Trucks UK has adopted a direct sales model already employed for the 7.5-tonne FUSO eCanter.

eActros comes as a 4x2 variant with 19-tonnes gross weight and three battery packs, and as a six-wheeled 27-tonner with either three or four battery packs. Each has an installed energy capacity of 112kWh and useable capacity of 97kWh.

The 4x2 chassis with three battery packs offers a maximum body and payload allowance of 10.6 tonnes. This rises to 17.7 tonnes in the 6x2 chassis with three batteries, or 16.6 tonnes for the longer-range version of the 6x2 with four battery packs.

The drive unit at the vehicle's heart comprises a rigid electric axle with a pair of integrated electric motors and a two-speed transmission. Both liquid-cooled motors generate a continuous output of 330kW (437bhp) and peak power of 400kW (529bhp). Electrical energy recovered through recuperation while braking is fed back into the batteries for use by the drive system.

Meanwhile, in Germany, rival MAN Truck & Bus presented a near-series electric truck that it will be launching on the market from 2024. In addition, the commercial vehicle manufacturer is intensifying its research into hydrogen mobility with five trials beginning in 2024.

DAF Trucks rolls out EV technician training



DAF Trucks has commenced dedicated electric vehicle (EV) product training for its network-based DAF dealer technicians, in anticipation of new deliveries of right-hand-drive LF Electric and CF Electric vehicles for UK customers in the coming weeks.

The training is being delivered at the DAF Academy based at DAF Trucks' UK head office in Haddenham, Buckinghamshire. It forms part of a comprehensive programme of activities to prepare the DAF dealer network for the uptake of EVs, with significant investment going into tooling and charging infrastructure, as well as training.

DAF LF Electric and CF Electric models are available to order in full UK specification, and, following the first demonstrators which were delivered last year, the first customer vehicles will enter service in the coming weeks.

DAF EV product training at the DAF Academy includes in-depth EV maintenance and diagnosis procedures specific to the DAF range of electric vehicles. Training content comes in addition to IMI Level 3 electric/hybrid vehicle system repair and replacement training, which all delegates on the DAF EV product training have already successfully completed.

"We're making sure we're fully prepared to support customers as they adopt DAF electric vehicles into their UK operations," said Suzanne Moore, DAF training manager.

in brief...

Ambitious engineers in the bus and coach sector can now apply for entry to the **IRTE Skills Challenge**. The progressive and inclusive engineering competition for apprentices and fully qualified technicians welcomes entries from PSV operators eager to showcase the high standard of their engineers. In early June participants will take part in the testing week, where they will compete against peers in their specialised field: mechanical, electrical or bodywork. There is also a special competition for technicians who are competent in both mechanical and electrical, and another for highly skilled, experienced technicians. For more information on how to enter, see *www.is.gd/yopika*.

Continental Tyres is seeking applicants to join its apprenticeship programme throughout 2022. Open to individuals of all ages and with no prior experience required, Continental's full-time tyre technician apprenticeship is delivered by Continental subsidiary, Tyre Maintenance at its sites in Leeds, Washington, Nottingham, Luton and Lutterworth.

The UK's first hydrogen-fuelled waste collection vehicle was revealed in Aberdeen. The truck started collecting waste and recycling around the city from early March and is the first hydrogen-powered waste truck to become operational in the UK. It will be refuelled from existing city infrastructure.

Delivery company **DPD** has welcomed Britain's first zero-emission zone (ZEZ) pilot, launched in Oxford, saying it will bring long-term benefits to the city, its residents and the wider environment. A larger ZEZ covering most of Oxford city centre is planned for 2023. DPD operates more than 40 EVs out of its Bicester depot, which serves the city.

The Stertil Group, part of Citadel Enterprises and located in Kootstertille, the Netherlands, has acquired Nussbaum Custom Lifts and Nussbaum World Lifts, a specialist in light duty vehicle lifts. Both companies will continue to distribute vehicle lifts through their existing and specialised distribution networks throughout the world.

Italian hydraulic component manufacturer **OMFB Group** has acquired UK dealer Commercial Vehicle Hydraulics following 30 years of partnership.

in brief...

TruckEast Norwich is the overall winner of Scania UK's 2021 depot of the year competition. It is the third time in four years the branch has won this recognition, having also claimed the award in 2018 and 2020. The East Anglian service centre beat Keltruck Hereford and sister location TruckEast Northampton, which finished second and third respectively, but had to be separated by a tie-break.

After a three-year wait, the bus and coach industry is eagerly anticipating the return of its principal trade show, **Euro Bus Expo**, taking place at the NEC Birmingham on 1-3 November. The exhibition is set to return with a renewed vigour and spotlights on innovation, decarbonisation and the future of passenger transport.

Motor trade organisations have joined forces with the Health and Safety Executive's (HSE) Working Minds campaign to tackle work-related stress in the motor repair trade. The commercial Vehicle Body Repair Association (VBRA), among others, has become a Working Minds campaign partner to champion the prevention of stress and poor mental health in the motor repair sector.

Rygor launched its new Maxus franchise last year, with a showroom based at its Newbury site. Maxus sales manager Paul Naylor said: "Not every business is ready for electric vans and I really don't think there is any point pretending that this is the case. However, companies who have a set or similar planned daily route, or who do a lot of city driving perhaps, could genuinely benefit from an electric van." It offers Maxus eDeliver 9, a 3.5-tonne van with 51.5kW, 72kW or 88.55kW battery options, as well as the smaller, eDeliver 3 of which a new 50.23kW battery model is said to launch this month.

More environmentally friendly heavy goods vehicles are allowed on Britain's roads, thanks to new government regulations that came into effect on 14 February. The new rules will allow haulage companies to choose vehicles with elongated cabs and aerodynamic features fitted on the back, including boat-tails, which help reduce fuel consumption. A 2013 study estimated that these aerodynamic improvements to HGVs could result in fuel savings of 7% to 15%.

Fruehauf production on schedule to grow

Four months since MV Commercial secured a new future for trailer and rigid manufacturer Fruehauf, production at the 67-acre Grantham site is seeing the benefit of a multi-million-pound investment. The specialist truck and applications dealer completed a multi-million pound deal to acquire Fruehauf out of administration in October 2021.



Steven Cairns, managing director of MV Commercial, said: "We are already producing 12 units a week, and as we start to see the result of the introduction of new build lines and state-of-the-art equipment, we anticipate that number reaching 20 a week before the end of the year."

Initially, production at the facility is focused on tipping trailers, with several new products scheduled for launch during 2022. In parallel with the increase in production, the company is growing its workforce, which has seen 30 new staff join the company since October.

"We are especially excited about the synergy between our two companies, both in respect of Fruehauf supplying trailers and rigids direct to MV, and also about establishing a major MV Commercial sales and service facility on the site," added Cairns.

Freeway integrates with Stratio

Freeway Fleet Systems has joined forces with Stratio to bring predictive maintenance technology to the commercial fleet market. Using artificial intelligence (AI) to process live data from vehicle sensors, Stratio's platform is being integrated with Freeway's fleet maintenance system to provide crucial, real-time information of on-the-road vehicle performance and condition.



Stratio's technology is said to eliminate unplanned downtime and reduces maintenance costs using AI to predict faults in key components. Stratio is working closely with Freeway to spearhead the introduction of the new technology into the UK bus, coach and haulage sectors.

"There have long been demands for live diagnostic data from vehicles to be incorporated into vehicle maintenance planning," says Patrick Tandy, managing director of Freeway.

"With Stratio's smart technology, there is at last a solution that delivers exactly what operators want. We see Stratio as a real game-changer, and work to integrate our respective platforms is already underway."

Freeway provides a digital solution for vehicle maintenance and compliance with mobile devices synchronised with a central asset management system to eliminate paper across the engineering operation. Freeway also manages stores and purchasing.

"Freeway already integrates with operations, driver check, fuel, accounts and enterprise management system, and we see Stratio as the final link in the chain; feeding in crucial real-time vehicle data so operators can be one step ahead of potential maintenance problems," Tandy adds.

SafeConnect...

Put the brakes on trailer runaway accidents...
A safe, practical & reliable solution for trailer coupling



The award winning safe trailer coupling device that ensures a trailers braking system remains permanently applied throughout the coupling process.

SafeConnect works by restricting airflow to the trailer brakes, ensuring tractor & trailer cannot inadvertently move during the coupling process. Only once the driver has returned to the cab and is in full control of the vehicle, can normal braking functionality be returned.

With no additional procedures for the driver to action, SafeConnect encourages best practice coupling procedures but delivers a reassuring failsafe to protect against potential accidents.

Call +44 (0)333 012 9108
Visit www.maplefleetservices.co.uk/safeconnect

MAPLE



First Bus to invest £35m in electric buses with funding

The approval of ScotZEB funding has prompted First Glasgow to add 50 electric buses to the 126 electric buses that are currently being delivered to its Caledonia depot, taking the total number of First Bus electric vehicles operating in Glasgow city to 200, accounting for over 40% of the total buses operating out of the two First Glasgow city depots.

First Aberdeen, meanwhile, will welcome 24 new electric vehicles, meaning its fleet is now made up of 30% zero-emission vehicles.

The approval of ScotZEB funding will also see major infrastructure developments across First Bus's Scotstoun and Aberdeen depots, with both set to receive significant investment in accelerating their electrification, helping to future-proof both depots as First Bus continues towards its commitment to operate a zero-emission bus fleet by 2035.

In 2020, First Bus also pledged not to purchase any new diesel buses after December 2022. This commitment goes above and beyond current regulations, solidifying First Bus's position as a leader in the transition to a low-carbon future, according to the company.

Duncan Cameron, managing director for First Bus Scotland, said: "Today marks another major milestone in our sustainable travel roadmap, with the approval of funding from the Scottish government allowing us to expand our electric bus infrastructure across the country.

"We are delighted to have been awarded this funding and we are proud to be continuing our journey towards achieving a 100% zero-emission fleet by 2035. Scotstoun will become the second of our depots in Glasgow to start its journey towards a zero-emission fleet, while Aberdeen will further enhance its growing number of zero-emission buses. Both depots will be future-proofed for further investment in zero-emissions vehicles as a result of the infrastructure work undertaken."

Ryder proposes to exit operations in the UK

Following a detailed business review, Ryder System Inc, the parent company of Ryder UK, is proposing to exit operations in the UK. This is a strategic proposal and is in no way a reflection of the efforts of the employees Ryder has in the UK, Ryder said.

On 16 February, the company entered into a period of consultation with its employees, customers and suppliers. The outcome of this proposal is expected to be announced in mid-April 2022.

Subject to the outcome of the consultation, Ryder is planning for an orderly withdrawal from the UK market over the next 12-18 months. The company will work with its suppliers and customers to help them understand the implications for their commercial vehicle fleets. The company will also be reviewing the potential for the divestment of its business operations with potential associated opportunities for employees.



Ainscough Crane Hire adopts HVO across fleet



UK lifting solutions company Ainscough Crane Hire reports that it has become the first national crane company in the world to commit to using HVO (hydrogenated vegetable oil) across its entire fleet. The move will cover Ainscough's 400+ cranes and 30+ transport and heavy goods vehicles.

Ainscough anticipates that the adoption of HVO will result in a CO_2 reduction of up to 90%. An additional 5% reduction has been achieved through wider energy-saving initiatives with the residual circa 5% met via the use of UK-based residual carbon offsetting, making the company carbon-neutral.

Ainscough is sourcing HVO through a guaranteed sustainable supply chain. HVO can be used as a direct replacement for diesel – meaning no modifying of Ainscough's fleet is required – and has a storage life over ten times that of traditional diesel, providing consistent performance in all conditions. Crane manufacturer Liebherr has supported the extensive trials of HVO across Ainscough's fleet to confirm emissions, performance and viability.

Peter Gibbs, chief executive officer, Ainscough Crane Hire, said: "Our fuel usage is the most significant aspect of our carbon footprint, accounting for the vast majority of the business's carbon emissions.

"This adoption has been made possible thanks to the sheer breadth of our depot network, meaning our team will have easy access to refuelling locations across the country." Ainscough is supported in its environmental strategy by its majority owner Blackstone.

Introducing the **Elite+**



We took the safest cab on the road and **made it better**

Find out more at:
dennis-eagle.co.uk

DENNIS EAGLE
A TERBERG ENVIRONMENTAL COMPANY



OFF-GRID

Methane needn't only be sourced from underneath the North Sea. In fact renewable, sustainable sources of the energetic gas can be found in food and animal waste – and are being tapped by an increasing number of transport operators, reports Steve Banner

With diesel prices heading skywards, global tensions on the increase, and last year's fuel shortages in south-east England still fresh in everybody's memory, many fleet managers must ache for a source of power that is independent of these vagaries.

If it is environmentally friendly and generated from a sustainable source of materials over which they have some control, then so much the better. If it allows their trucks to cover respectable distances without being encumbered by heavy battery packs, then that is better still.

Legendary Scottish malt whisky distillery Glenfiddich may have found the answer. Owned by independent family-owned distillery William Grant & Sons (WG&S), it is running trucks on biogas made from byproducts of the distilling process: spent grain, known as draff, and pot ale, the residue from fermented mash liquid. The waste is loaded into an anaerobic digester, bacteria without oxygen break it down, and biogas is the consequence. Proprietary compression and dispensing facilities have been installed, and the entire exercise has been cost-neutral, says the company.

Any solids left over are used to fertilise fields of barley grown by the farmers who supply the Dufftown, Moray, business. The technology underpinning this closed-loop system has been developed by WG&S in-house.

Last year saw Glenfiddich take delivery of a trio of IVECO Stralis NP (Natural Power) 454bhp 6x2 tractor units. Their 12.9-litre engines can run on compressed natural gas – IVECO has invested heavily in developing vehicles that will do so – and happily consume the distillery's biogas (pictured, pp16-17). They offer a range of up to 300 miles between refills.

Says WG&S distilleries director, Stuart Watts: "The biogas we use reduces CO_2 output by over 95%, and other harmful particulates and greenhouse gas emissions by up to 99% when compared with diesel. Each truck displaces up to 250 tonnes of CO_2 annually."

If your business model means you do not generate sufficient waste to feed an anaerobic digester yourself, then sourcing it from your customers could be the next best thing. That is the route being pursued by Lisburn, County Antrim, ambient, chilled and frozen logistics company McCulla (Ireland).

Its anaerobic digester (pictured above) is fed by food waste sourced from retailer Lidl, among others. The resulting biogas fuels 11 McCulla trucks, says business development manager, Alan Thompson, and should be powering 60 by the end of 2023.

Cutting the company's carbon footprint isn't the only benefit of biogas. "It's cheaper than buying diesel because we're making it ourselves," he comments.

IVECO tractors are again playing a prominent role in the initiative, this time S-Way NP CNG 4x2 454hp tractor units. McCulla plans to phase out the use of diesel in its 105-strong truck fleet over the next five years, in favour of biogas. Gas from the digester has been used to power other elements of the business since 2017, including its cold stores.

Gas trucks run more quietly than their diesel stablemates, says McCulla, which



GAS

means early morning and evening deliveries to supermarkets cause less disturbance.

INVESTMENT COST

Anaerobic digesters vary enormously in price depending on their capacity and level of sophistication, points out biogas specialist Birch Solutions. A basic system could require an investment of £750,000 to £1m, while a major plant connected to the gas grid could cost up to £15m. As McCulla's Thompson points out, however, if you are producing your own fuel, you are not buying from a third party; and the ability to sell any surplus can be a useful source of revenue.

There is also the thought that drawing gas from a gas main in order to run your fleet is not always an option. While the UK gas grid is comprehensive in urban areas, rural

TELLING IT STRAIGHT



Despite all the PR hype and hullabaloo, the blunt and brutal reality is that no manufacturer has as yet come up with a zero-emission light commercial vehicle or truck that satisfies all the requirements of transport fleets and can be put to work in the real world. So says Jorge Asensio Lopez (pictured), IVECO's UK medium and heavy country product manager and alternative propulsions lead.

"None of us have got there yet," he admits. "In developing carbon-free, zero-emission vans and trucks, we have to remember that those who use them every day are practical people," he continues. "They employ them to do a job, and to make money.

"As well as being emission free, those vans and trucks must have the range, the load capacity, the reliability and the dependability to do that job," Asensio Lopez continues. "They must be easy to live with, to use, to refuel and to look after.

"Most importantly, they must be cost-efficient," he says. "Here I'm talking about their cost of acquisition, their running and maintenance costs, and their whole-life cost. No one has a 100% emission-free heavy van or truck that can deliver all those priorities today."

Asensio Lopez expressed his pungent views on the disappointing state of the zero-emission commercial vehicle market at IVECO's State of the Nation press conference, held at the manufacturer's UK headquarters in Basildon, Essex.

He concedes that lighter vehicles are well on their way towards reaching many of these goals. In this context it is worth noting that IVECO will launch an electric version of the latest Daily 3.5-to-7.2-tonner at the IAA Transportation commercial vehicle show in Hanover, Germany in September.

"The larger and heavier you get, though, the further and further away we are from achieving these objectives," he says.

He believes it will be at least a decade before emission-free models emerge that can be truly viewed as viable alternatives to the diesels that are on sale now.

Even if a suitable truck were to be made available today, operators would face another challenge, he contends: the presence (or lack thereof) of the necessary infrastructure to support it, especially when it comes to refuelling. "The reality is that practical, reliable and versatile 100%-emission-free transport – the equivalent of the almost worry-free transport we enjoy today with diesel – is still some way away," he argues.

He agrees that some operators are willing to be early adopters of zero-emission technology nevertheless, and concedes that trucks are coming on to the market that can meet at least some of their needs. "However, the operators concerned need to have set routes, limited range and payload requirements, and very deep pockets," he observes.

All of this suggests that the widespread adoption of electric trucks developed by IVECO – including models powered by fuel cells developed in conjunction with Nikola – is likely to be quite some distance away. In the meantime, Asensio Lopez is arguing strongly in favour of the adoption of trucks fuelled with biomethane as a halfway house.

This of course smacks strongly of special pleading; IVECO has invested heavily in the necessary technology and needs to see a return on its outgoings – and biomethane cannot be classed as zero-emission. Yet Asensio Lopez points out their operational compatibility with current duties. "Biomethane can reduce tailpipe emissions by as much as 95%, and in operational terms there is no difference between running a truck on biomethane and running a diesel," he contends. "They are easy to refuel, and the refuelling network is expanding fast."

Nor do biomethane trucks impose a serious payload penalty, he says. "Yes, they are more expensive to acquire, but for most businesses that do, a two- to three-year payback is very much the norm," he claims. "Against the upfront capital cost of today's initial emission-free offerings, there is no comparison.

"Sure, biomethane is an interim solution," Asensio Lopez says. "However it offers a practical, workable, low-emission alternative to diesel now, today and tomorrow."



"Cutting the company's carbon footprint isn't the only benefit of biogas. It's cheaper than buying diesel because we're making it ourselves"
Alan Thompson

operators may find that their nearest outlet is several miles away. Nor is there any shortage of food waste; Britain produces around 19m tonnes of it annually, says Birch.

POO TO POWER

Yet another approach to producing biogas is posited by Cornish business Bennamann. It has developed technology which collects so-called fugitive methane from slurry pits on cattle farms using a gas-capture canopy. The resulting biogas is now being used to power vehicles in service with Cornwall Council through Cormac, the council's wholly-owned fleet provider.

"Twelve of the vehicles are used by workers who repair potholes in roads," says Tim Fox, Bennamann's head of corporate communications and public affairs. Bennamann carried out the initial development work at Chenoweth Farm, just outside Truro. Cornwall Council owns 104 tenant farms. Fifty-eight of them are dairy farms, and Bennamann has been busy installing its technology in six of them, with herd sizes ranging from 70 to 300.

"We've got one near Saltash that is up and running; two more are being completed, and the other three are in the pipeline," Fox says. "They should all be in production sometime next year." Each farm's lagoon will be capable of storing a week or more's worth of gas.

"The idea is to steadily convert the bulk of the 58 and for the gas to eventually power the entire Cormac fleet at 3.5 tonnes and above," he adds. "Cormac provides around 1,000 vehicles to the council. If a farm's slurry lagoon is in a poor state then we'll look at replacing it," says Fox.

The compressed gas is collected by a tanker trailer and delivered to Cormac to be dispensed. "It delivers a fuel saving of around 20% compared with diesel, and we've been developing the capability to liquefy it," Fox says.

Bio liquefied natural gas could appeal to hauliers who wish to travel far beyond Cornwall, given the extra range it can deliver. "Liquefying the biomethane would also make it easier for us to transport from the farms," he observes.

MORE WHERE THAT CAME FROM

The feedstock the process employs is not in short supply. UK farms produce around 90m to 100m tonnes of slurry a year, according to the Royal Agricultural Society of England, and the environmental consequences include the potential to pollute water courses as well as generate greenhouse gas emissions. Methane has 86 times more global warming potential than CO_2, says Bennamann.

Bennamann is starting to be noticed on the global stage. Last year saw CNH Industrial take a minority stake in the business, a year which also saw CNHI spin off IVECO, although CNHI's biggest shareholder Exor remained IVECO's largest shareholder at the time of writing.

Bennamann's technology is not restricted to dairy farms. Poultry and pig farms can make use of it too, says Fox. "It means farms, including small farms, can become energy producers," he enthuses. "It's a local energy revolution."

It is an approach that many transport companies may favour over one which involves purchasing biomethane, arranging for it to be injected into the gas grid, then drawing the equivalent amount from their local gas main; assuming there is one. Under those circumstances they may find they are actually running their vehicles on North Sea gas – a fossil gas – rather than biogas, because that is what makes up the vast majority of what comes out of the gas pipe.

If you source from Bennamann, however, then you can be sure that what goes into your trucks is pure biogas, says Fox. "You can see the cows on top of the hill," he smiles. TE

Get stress FREE tacho downloads



Eliminate the stressful and time-consuming job of manually chasing, collecting and downloading driver cards and vehicle unit tachograph data.

Let the Tachomaster DOT device remotely download your tachograph data daily. Monitor driver availability, work, drive and rest periods live and massively reduce driver infringements.

With zero upfront costs, no additional UK sim card charges and pay as you go. What have you got to lose?

www.tachomaster.co.uk
Call 01923 460000

TACHO MASTER | DOT

Tachograph Analysis I Vehicle Tracking I Transport Management System
Driver Licence Checking I Walk-Around Vehicle Checks I www.roadtech.co.uk

The DOT device is only available for Tachomaster customers, and Tachomaster charges apply.

DVSA EARNED RECOGNITION
Approved IT supplier

Organic goodness?

While home-brew methane produced from anaerobic digestion might be cheaper and more environmentally friendly than North Sea fossil gas, customers still need to take care it is safe for their vehicles, points out Toby Clark



There is a strong incentive to use biogas – natural gas produced from agricultural waste and other biomass – as a fuel for heavy vehicles (see also pp12-14, and for details about Glenfidditch operation, pictured). Scania reckons that by switching to locally produced biogas, "operators can reduce both their own and their customers' climate impact by up to 90%". (Its latest 13-litre gas engine is pictured.) But not all biogas is created equal: whether compressed natural gas (CNG) or liquefied natural gas (LNG), it must have sufficient energy content and be free from engine-damaging impurities.

The Natural Gas Vehicle Network reported in May last year that 93% of the total dispensed volume of gas used in gas-powered HGVs was biomethane. But, as James Westcott, chief commercial officer at Gasrec, points out: "There aren't many vehicles that actually use biomethane in the truck. They're using gas from the grid, but it's a mass balance process." This means that a customer can buy a 'virtual' green fuel knowing that there is a corresponding quantity of actual green fuel somewhere in the network – the same principle that 'green' electricity suppliers use. Of course, this system only works if there is a similar quality standard for biofuels as for fossil fuels – and they include ISO 15403-1:2006 and European standard EN 16723-2:2017. On that point, EUROMOT (the European Association of Internal Combustion Engine Manufacturers) suggests that gas properties should always be quoted at the ISO 13443:1996 standard reference conditions of temperature and pressure (15°C and 1,013.25mbar).



Gasrec itself doesn't produce any biomethane: "Gasrec's place is to provide the facilities and the supply chain to fuel gas vehicles, with open-access facilities as well as dedicated refuelling sites for customers. We supply biomethane as both LNG and CNG – for Gasrec, the vast majority is LNG, as we find that suits the heavier market better."

Westcott mentions that BP confirmed an investment in Gasrec for long-term supply of biomethane in December 2021, adding: "I see that as endorsement for the market."

HOME BREW

Anaerobic digestion (AD) facilities are becoming a common means of generating energy from agricultural waste products that would otherwise contribute to greenhouse gas emissions (see box, opposite).

The biogas may be used to run a combined heat and power (CHP) plant, or injected into the mains gas network, or used to fuel an internal combustion engine – but whatever the use, it needs to be treated to remove contaminants.

Biogas (and to a certain extent also 'fossil' natural gas) can contain a wide variety of impurities, whether from the manufacture or extraction process, or sometimes from storage and processing (for example, compression). For a start, biogas typically contains significant

"There aren't many vehicles that actually use biomethane in the truck. They're using gas from the grid, but it's a mass balance process"

James Westcott

levels of CO_2 (which may pool, with a risk of asphyxiation), as well as volatile organic compounds and toxic levels of gases such as hydrogen sulphide (H_2S). These last two may be removed using activated carbon filters.

Diluents are also present: these 'dilute' the gas by having no significant energy content, so reducing the overall calorific value of the fuel. These include nitrogen (N_2), carbon dioxide (CO_2) and even hydrogen (H_2), which has a much lower energy content per unit volume than methane. Hydrogen can also cause embrittlement of steel gas tanks.

Natural gas and biogas are largely composed of methane (CH_4) but can include varying concentrations of other hydrocarbons. These include 'light' hydrocarbons (those with one to six carbon atoms per molecule) such as ethane (C_2H_6) and propane (C_3H_8), and 'heavy' hydrocarbons (with more than six carbon atoms per molecule) such as compressor oils introduced during processing.

While these compounds can usually be burned, light hydrocarbons can affect the knock resistance of the fuel, and change the air-fuel ratio, upsetting mixture control. In fact, for some non-automotive purposes, propane is injected into biogas deliberately to increase its calorific value.

Heavy hydrocarbons can be more problematic, condensing or 'dropping out' of the gas and fouling fine components such as injectors.

Water vapour can cause similar problems: it may drop out of the fuel at low temperatures to collect as liquid water or even ice, blocking pipes and valves. It is also a diluent, and combines with other impurities such as hydrogen sulphide and carbon or nitrogen compounds to create acid solutions which corrode tanks and other components.

Sulphur compounds are a significant concern in the composition of natural





gas: some are added deliberately as odourants, while others occur naturally in extraction or biogas production. (Incidentally, the familiar smell of UK mains natural gas comes from 'odourant NB', a blend of t-butyl mercaptan (TBM) and dimethyl sulphide, which mimics the sulphurous stench of some natural gas.)

BAD FOR ENGINES

Hydrogen sulphide (H_2S) is a common byproduct of AD biogas production, but it and other sulphur compounds cause corrosion and damage exhaust catalysts in very short order. One study showed a 91% reduction in effectiveness after just 100 hours of operation in the presence of 4ppm SO_2. EUROMOT recommends a maximum of 10mg total sulphur per m^3 of gas; mains gas in some countries has a considerably higher level. It suggests that sulphur-free odourants (already common in Germany) be used.

Siloxanes are silicon-based compounds often found in biogas; they too can damage catalysts, and cause problems with exhaust oxygen (lambda) sensors. Bosch recommends a maximum silicon content of $0.1mg/m^3$.

Biogas is filtered to remove some of its impurities, but an obvious way to remove many of them is the liquefaction process to create LNG: the process of cooling to around -145°C 'sweetens' the biogas, removing heavy hydrocarbons, water and other components.

John Comer, product manager at Volvo Trucks, says: "It's much more energy efficient to send it to the grid – especially with LNG – and the beauty of LNG is that it's cleaner than natural gas." (Volvo recently supplied 12 LNG tractors to Gregory Distribution, pictured above.)

Whichever truck you run, your gas supplier should state the standards they are operating to, and give details of the specification of the gas, particularly in terms of sulphur and silicon content.

As Jonas Strömberg, sustainability director at Scania, says: "Biogas will be one of the key tools for decarbonisation of heavy-duty transport… [it] is not only one of the fuels with the lowest CO_2 emissions, it also solves local waste problems, creates local jobs and brings carbon and nutrients back to the soil. It is circular economy in practice." TE

WHAT IS ANAEROBIC DIGESTION?

Anaerobic digestion takes place in a digester, or reactor – essentially a tank which excludes oxygen, allowing micro-organisms such as bacteria to work on the ingredients inside. The biomass is made up of large organic polymers which are first broken down into smaller parts such as sugars by a process called hydrolysis; these in turn are broken down into smaller and smaller molecules by successive processes of acidogenesis, acetogenesis and methanogenesis. This final stage produces methane (CH_4), carbon dioxide (CO_2) and water. The remaining indigestible material is the digestate.

we think transport

Come round to our way of thinking

with the renewed Airlight II round axle, our universal air suspension.

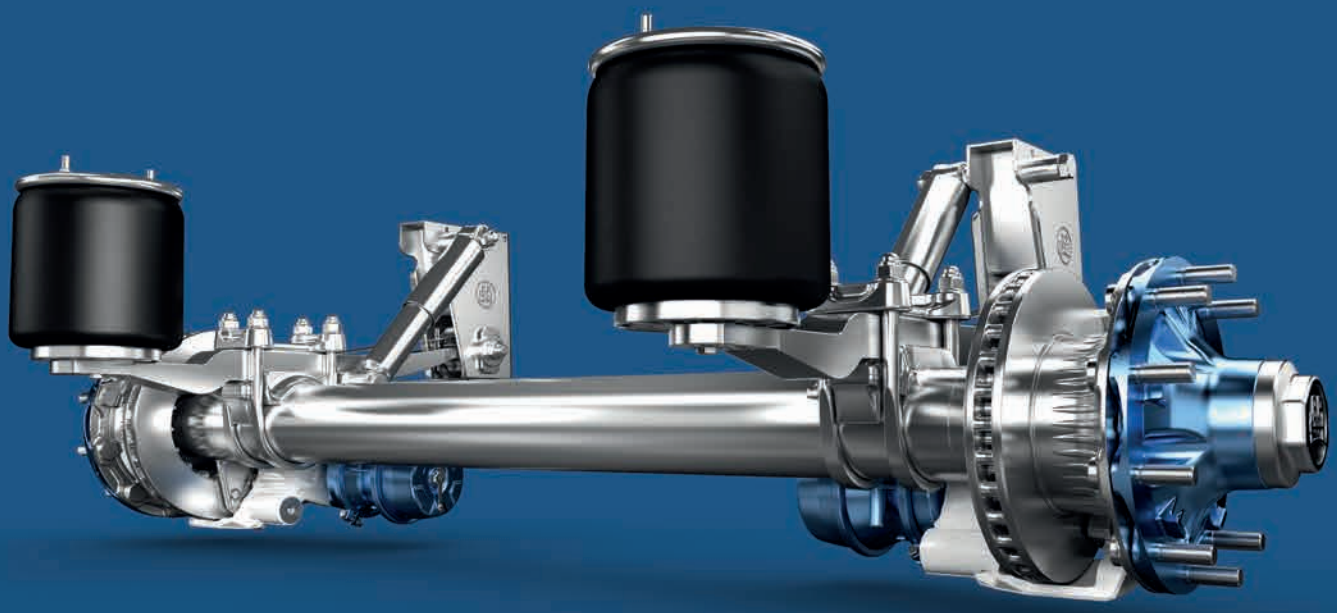

The BPW Airlight II air suspension system has evolved.

The Airlight II-Round, also known as ALII-R, provides even greater versatility and variants to meet the specific demands of the operator. Due to its innovative, lightweight design, ALII-R reduces fuel consumption, whilst increasing payload.

Light. Robust. Economical.

- ✓ Greater efficiency and CO_2 saving.
- ✓ Modular system - cost effective.
- ✓ Low maintenance.
- ✓ Maximum vibration absorption.

For details contact
0116 281 6100 | info@bpw.co.uk | www.bpw.co.uk

COMMERCIAL VEHICLE SHOW
24–26 MAY 2022 NEC BIRMINGHAM

HALL 5 | STAND D80

COMMON RANGE

Cummins is launching a series of what it calls 'fuel-agnostic' versions of the 15-litre X15, 9-litre L9 and 6.7-litre B6.7 internal combustion engines that can run on low-carbon fuel types, including hydrogen, in addition to the diesel and natural gas options that it already offers

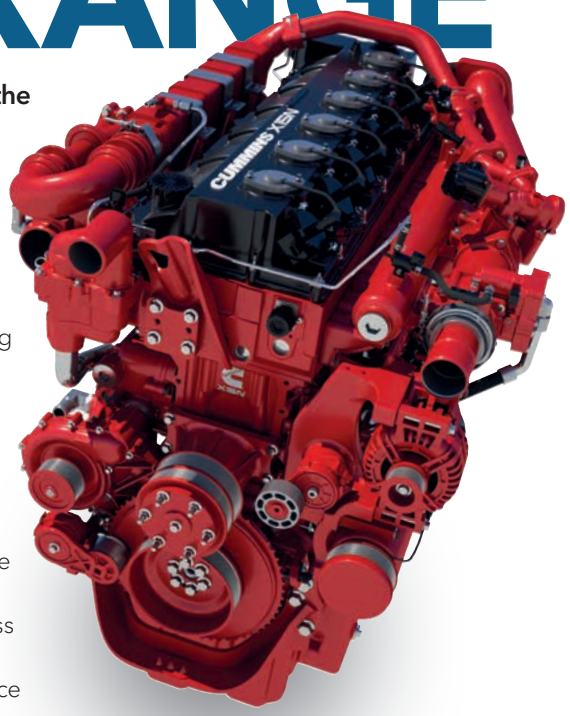

Although the diesel engine OEM now also offers battery-electric, hybrid and hydrogen fuel cell drivetrain options, Cummins is expanding its range of lower carbon fuel options to appeal to customers that aren't ready to make that move from diesel in one jump.

"We know the planet can't wait for the perfect solution," said Srikanth Padmanabhan, president, Cummins engine business, in a video recorded to mark the launch. "Our approach is a combination of using zero-emissions power where it is available, and using cleaner, reduced, lower carbon power where it is not. This I call, 'continuous improvement beats postponed perfection'."

He adds that the basic concept of the next generation B, L and X-Series [pictured is the X15N gas engine] is that below the head gasket will be similar components, and above the head gasket will be different components for different fuel types. Each engine version will operate using a different, single fuel. The platform can incorporate either a dedicated compression-ignition system for diesel, or spark ignition for natural gas and hydrogen fuel (and propane and gasoline in America).

Such a design offers the advantage of parts commonality. Jonathon White, vice president, engine business engineering, said: "Our engineers wanted to design products that reduce carbon emissions without a steep learning curve in terms of adoption... These new engines will have 80% parts compatibility and look and feel familiar to customers and technicians. The engine architecture, engine footprint and even service intervals are all designed around using the same parts and components where possible."

Working on a familiar base will ease the adaptation process operationally, in terms of upskilling technicians and kitting out workshops.

And the upfront costs of these engines will be much lower than moving to fully electric or fuel cell options, according to Amy Burger, vice president, North America on-highway, a factor that she calls critical for lowering the barrier for entry for fleets looking to introduce emissions-reducing technologies today. In addition, the architecture and footprints will be similar to existing across the different fuel types, to simplify integrating various fuel types across the same chassis.

White says the process of testing the hydrogen-based ICE is "progressing well". In terms of launch date, Cummins says it plans to coordinate with the advent of Euro VII regulations in the 2025-27 period.

Despite these developments, White also adds that Cummins continues to work on improving the efficiency of its diesel platform. TE

WHAT TO CONSIDER

Brett Merritt, Cummins vice president, on-highway, offers advice about what customers should consider when switching driveline technology:

- **How much upfront cost they can afford for their truck or bus**
- **How do they balance new technology introduction across duty cycles, routes, technologies, and what percentage of their vehicles do they address, and when do they do it**
- **For OEM customers, how much resource or cost technology choice will drive in the integration and validation process.**

He concludes: "At the end of the day, most of our customers operate their business on a total-cost-of-ownership model, which will change over time, over the range and over the duty cycle requirements. They must understand the implications of these technology decisions on their bottom line."



3.5-tonne van MOT failures are unacceptably high and defective brakes are second on the list of causes after headlamps. Can more be done to reverse this worrying trend? Peter Shakespeare reports

VAN BRAKEDOWN

MOT Class 7 vehicles in the United Kingdom are defined as commercial vehicles from 3.0 to 3.5 tonnes gross vehicle weight (gvw). In other words, a typical large panel van. Drop below this into the realms of the tradesmen's mobile toolbox coming in under 3.0 tonnes and the vehicle falls into the Class 4 MOT category, which also includes cars.

So why is this distinction significant? According to the Driver and Vehicle Standards Agency's last published data on MOT failure rates at press date (quarter 2 2020), 45% of Class 7 vehicles failed their annual MOT inspection. Of these, 17.6% failed due to defective brakes. Of significant concern, 42.8% of these defective braking systems were categorised 'dangerous' by DVSA. This represents a 100% increase compared with Class 4 vehicles.

Given that this type of van is the preferred vehicle for parcels and express distribution, it can clock up colossal annual mileages, often working six days a week. Despite their weight, usage and mileage, Class 7 vehicles only require an initial MOT three years after first registration. While the latest MOT failure statistics represent an improving trend over the preceding five-year period, they are still too high.

When asked why the initial MOT presentation period hasn't been reduced to one year, as is the case for large goods vehicles, DfT stated there are currently no plans to change the MOT requirement for Class 7 vehicles. A spokesperson added: "We are aware of these concerns and expect all operators and drivers to maintain their vehicles appropriately, regardless of when their last MOT test was undertaken. Using a vehicle on the road in an unsafe condition is a criminal offence."

DISPARITY WITH HGVS

Automotive testing equipment manufacturer Maha UK reinforces the point about regular inspection. Heavy commercial vehicles, which are doing significant amounts of miles, have a brake check every three months, in addition to an annual brake check at the annual MOT.

In contrast, general servicing on a light commercial vehicle (LCV) may only have minimal maintenance on the brakes, so the first MOT test has the potential for failure because maintenance of the brake system could have been neglected.



A spokesperson said: "If you imagine someone who's driving in excess of 80,000 miles a year in an LCV, there's a lot of scope for the brake system to go wrong if it's not maintained regularly or correctly. There's no mandated brake testing on that vehicle other than the annual MOT test, so that's a lot of miles for important components to potentially wear and deteriorate." Maha recently supplied Class 7 equipment including a brake tester for South Street Motors in Somerset (below). Other suppliers include Totalkare (other images) and VLT (see p23).

"The MOT brake test involves testing the maximum force of each wheel and the imbalance across each axle, the rate of increase/decrease, bind, judder and grab, so it's a thorough test, but may not be regular enough," added Maha's spokesperson.

Maha explains that the margin for pass or fail for N1 Class 4 light goods vehicles is a minimum 50% service brake efficiency over all axles and 16% parking brake efficiency. If a vehicle weighs two tonnes, for example, it must have a minimum of 1,000kg total service brake force to pass. However, if more than half the wheels lock on any given brake type,



"I'd urge any operators to take the MOT issue seriously, and know that VW and our Van Centres are here to work with them to keep their vehicles safe and their businesses on the road"

James Allitt

then the vehicle will be seen to have met the requirements.

On a Class 7 LCV, brake efficiency is calculated over the gross weight. Testers will be looking for a braking efficiency more easily achieved by a laden vehicle; however, it can (and more likely will) pass on locks – this may cause uncertainty with brake performance while the vehicle is loaded, but unfortunately is quite often unavoidable. With Class 7 LCVs, it is best testing one wheel at a time. This means that higher efficiencies are generally achieved, as the likelihood of the vehicle leaving the rollers is reduced and premature wheel locking is avoided.



INSIGHTS

Steve McQuillan, head of central operations at ATS Euromaster, provides further insight into why so many large vans fail their first MOT. He explains: "It is in the interests of your business to do everything you can to ensure the van passes its MOT. Along with your tyres, your brakes are the most safety-critical components of all, and they must work properly to pass the MOT. Fortunately, brake-related faults are fairly easy to spot: grinding or screeching signals that the pads are wearing thin, while if your van veers to one side as you brake, it could mean a malfunctioning calliper. These can easily be fixed before the MOT. Be sure to check the handbrake before the test, too: stop on an incline and apply the handbrake to ensure it holds your vehicle still.

"Generally, 3.0 to 3.5-tonne vans are real workhorses... so naturally will be subjected to more wear and tear. But also a lack of maintenance and pride taken to care for company vans by drivers can exacerbate the problem.

"We also find that as modern vehicles generally have higher mileage service intervals, 20-30,000 in some cases, this means inspection may not take place until components are worn out or then failed on MOT.

"Additionally, overloading and the weight carried in the vehicles will cause excess further wear, especially under braking. This can lead to broken ABS, worn warning wires and even handbrake cables being snapped.

"Our technicians also report load compensator valves sticking or failing, with vans being loaded to the max all the time and then often presented for test unladen. Tipper vans can suffer from callipers becoming caked in mud and clay as a result of site use.

"Many vehicles fail an MOT test for small issues, which could easily be prevented before the test. So it's a good idea to prepare an MOT checklist a couple of weeks before the date of inspection to make sure your vehicle is in the best possible condition it can be; this will allow you to proactively fix the issues and avoid any inconvenient circumstances if the vehicle fails the test." He adds that ATS Euromaster offers free visual brake inspections at centres.

Volkswagen Commercial Vehicles' head of aftersales, James Allitt, agrees that many vans are failing the MOT with simple maintenance issues that would be picked up by regular servicing. He advises operators to consider servicing packages, which he says take the hassle and stress out of regular commercial vehicle maintenance. The OEM offers mobile service clinics to support busy fleets, supported by skilled staff who are said to understand the needs of LCV drivers and owners. TE



OPINION

Stricter regulation of this class of vehicle is probably the answer to MOT first-time failure rates. But given DfT's reluctance to act, vehicle operators must self-impose regular scheduled maintenance on their fleets, rather than settle for the bare minimum – which arguably 45% of van operators seem happy to do, if DVSA's statistics represent the real-world situation. ***– Peter Shakespeare***

Proventia Noxbuster® City



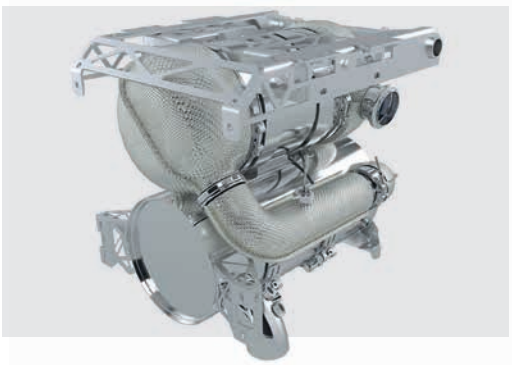



UPGRADE YOUR FLEET

to ULEZ and CAZ emission standards

- High NOx and PM reduction rates at low exhaust temperatures (below 200°C) and cold weather conditions (PEMS, WHVC and MLTB)
- Upgrades Euro IV and V vehicles up to Euro VI emission levels
- Compliant for ULEZ and CAZ's, avoiding fines and charges.
- Direct OE fit replacement for major Bus, Coach and Truck applications.
- Excalibre installs on-site, services and maintains the system, minimising downtime of your vehicle

Proventia in partnership with Excalibre
Contact us: 01594 887414, sales@excalibretech.com

Excalibre
Driving Cleaner Emissions

PROVENTIA



SCS® SMART CONTROL SYSTEMS

Intelligent CAN solutions for vehicles

Our answer to digitalisation and increasing complexity:
CAN-capable power distributors and I/O modules: SCS20, SCS200, SCS1000/3000;
including Power relays MPR10, MPR20, HPR10 and EPR10







YOUR BENEFITS

- Condition monitoring through diagnostic capabilities (current, voltage, load protection)
- Networking and data transmission through the CAN 2.0B standard and J1939 compatibility
- Cost saving due to reduction of wiring effort
- High IP protection classes up to IP67
- Up to 280 A in compact design

E-T-A Circuit Breakers Ltd.
+44 (0) 1296 420336
info@e-t-a.co.uk

www.e-t-a.co.uk

E-T-A®
ENGINEERING TECHNOLOGY



ONE-STOP SHOP

Independent commercial vehicle workshop J&M Morgan Engineering won approval for an ATF lane at its Lancashire workshop only months after DVSA lifted the moratorium on new licences. Will Dalrymple reports

The benefit of the ATF was to create a one-stop shop, says John Lewis, MOT operations manager. "We were using a third party for 35-40 tests per month, and to reduce time and costs for us, it seemed like the natural next step." Now if the garage carries out a service on a Friday, the vehicle will be put in for test on a Monday (the lane, limited by DVSA vehicle examiner shortages, is only open one day a week).

In addition to the ATF services, it also uses the lane to offer MOTs for cars (Class 4), mini-coaches (Class 5) and light commercial vehicles (Class 7). Lewis describes the MOT offering as a 'plan B' originally implemented because of uncertainty about the ATF application moratorium.

He explains: "That wasn't the original approach we were looking at, but we wanted to find a way to recoup our outlay. The MOT facility wouldn't cost any more than a bit of training. We have our own fleet of company vehicles and vans, and there are also staff vehicles. We also have Class 5 operators coming for repairs. We don't do light vehicle repairs unless customers can't." In addition, he points out that some Class 4 vehicles can't be tested at normal sites, such as large motorhomes. (An informal relationship with a nearby MOT centre sends the larger vehicles to J&M.)

Established in 1991 by a father and son team, J&M Morgan moved to the site, then equipped with a two-bay workshop with two pits, in 2007. It then received planning permission for an additional three-bay building with a single pit mounted in the middle. To make the ATF, the end bay was fenced off and converted by VLT Test Systems. It features a new pit and a VLT brake tester, which is backed up by an existing brake tester used for tachograph calibration.

As an independent, the workshop is not formally affiliated with any HGV or PSV brands, although it is a WABCO service partner. Lewis describes the operation: "We're a heavy vehicle service maintenance operator and repairer. We offer tachograph calibration, a tachograph bay, MOT testing for Class 4,5 and 7 vehicles, tests for PSVs and HGVs, a diagnostics bay and four-wheel laser alignment. For 16 staff, that's a large operation." It also stocks parts on site and holds impress stock for some suppliers.

Four staff are apprentices, training at either Preston or St Helens College. Adds Lewis: "When they go to college, they compare what they do with the others, and it's vast. They are working on a different vehicle every day: different specification, different type."

He continues: "One apprentice is currently assisting with an engine refit in a battle bus; it's an old military truck that goes to parties offering paintball." Lewis admits that the workshop does pass on to specialists bodywork, air conditioning, tail-lifts and gearboxes (the latter because of the cost implications and the time involved). "Otherwise, the guys will turn their hand to anything; they are constantly learning and passing on experiences to apprentices." All but two technicians are accredited to irtec inspection technician level, and Lewis says he is weighing up applying to become an irtec assessment centre, if it can tap into demand in the neighbourhood of the garage. It is also considering applying for government grants to upskill some of the technicians to Level 3 from Level 2.

One of the apprentices is gearing up to take his end-point assessment. Asked what he will do once he qualifies, Lewis concludes: "Our apprentice will stay, what with the increased business. We have gained some maintenance contracts from the ATF lane." TE



Start your engines

The Commercial Vehicle Show returns to the NEC on 24-26 May. Here's a preview from selected exhibitors, in alphabetical order

Show director Murray Ellis says: "The 2022 event is a place for everyone working in the CV sector. It's an event where we know that business gets done, and it has the longevity to back that up. It is the largest and best CV event in the UK." Live show-floor theatres return this year, picking up challenges in the market such as resource shortages and the switch to low-carbon vehicles.

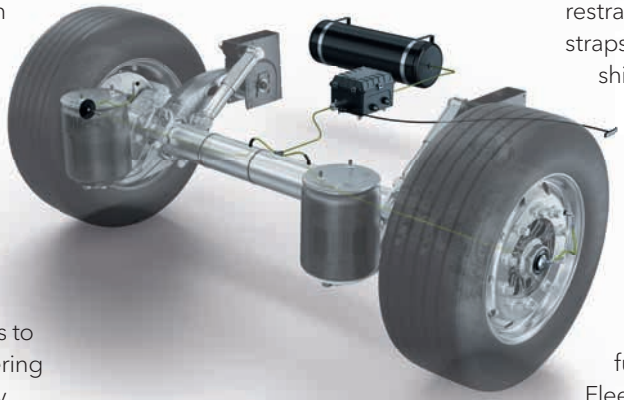

BPW 5D80

The axle manufacturer's stand will consist of its semitrailer-mounted mobile training facility, which travels to the UK a couple of times a year offering service and maintenance and heavy axle courses (in addition to training offered at its Leicester factory and HQ, and that offered by GTG Training in Scotland and South-West College in Northern Ireland). On that topic, BPW has also begun publishing training videos on its YouTube channels, such as maintenance procedures for BPW hub systems ECOPlus, ECOPlus 2 and ECOPlus 3 (see *www.is.gd/toguxe*).

To be shown for the first time is Active Reverse Control, a system to improve control of a self-steering axle when reversing; the electro-hydraulic system consists of control and hydraulic units and steering cylinder, and relies on a sensor system based in the unit rather than the kingpin to detect the vehicle direction and angle of steer. A remote control is also available.

Other products displayed at the show include the Airlight II Round axle, launched at the end of last year, for 9t axle loads, and in contrast to the company's prevailing quad-beam axle profiles. There's also the AirSave system (pictured above) for continuous real-time tyre pressure monitoring, which can also be connected to BPW idem telematics portal Cargofleet 3.

Other new products that might be on display include the ePower, an axle with regenerative energy production system to fit to trailers, as well as eTransport, an electric drive axle.

Finally, iGurt is an intelligent cargo restraint system that attaches to load straps to let drivers know if cargo has shifted or come loose. An Android app automatically alerts drivers in case of movement, so they can stop the vehicle to investigate.

CHEVIN FLEET SOLUTIONS 5F84

Designed to simplify the fundamentals of fleet management, FleetWave Lite helps organisations move away from spreadsheets by consolidating key fleet data such as vehicle information, maintenance schedules and driver's licences in one place. FleetWave Lite lets users see critical live data and address key actions in one intuitive dashboard, allowing them to delve into their fleet data across a multitude of standard reports. It also allows organisations to tailor the user experience, dashboard and alerts depending on their role in the organisation, ensuring they remain focused on the task at hand. It is offered for £3 per vehicle per month.

"The 2022 event is a place for everyone working in the CV sector. It's an event where we know that business gets done, and it has the longevity to back that up. It is the largest and best CV event in the UK"

Murray Ellis

FORD 5E10 & 5E20

The LCV vehicle OEM's emphasis is Ford Pro, a new division of Ford CV. This is said to go beyond product to take in data, services, connected vehicles, charging and Ford Live uptime services. The purpose of the offering is to provide connected data to decrease delays in breakdown repair.

In addition, the final production version of its battery-electric panel van, E-Transit (pictured), will make an appearance. Having been in trials for at least 18 months, the vehicle, now available to order, will start to appear on UK roads this summer. There will also be a new Torneo Connect on stand, which is part of a VW-produced vehicle range.



HAULIERMAGIC 5B05

Data Insights says it heavily invested in the development of HaulierMagic, a completely digital transport management system tailored option for general logistics, haulage, groupage, pallet network and bulk transportation, along with a host of freight operations. HaulierMagic supports both standard and bespoke integrations. The system is said to provide teams with a clear view of daily operations, while performance analytics offer corporate management teams insights behind productivity and profitability. Additional functionality includes map-based planning, digital POD capture and management, automated invoice generation, or traffic and tariff management.

ISUZU (UK) 5D60

A range of pick-up trucks will demonstrate a retail and fleet focus. For the latter will be a number of vehicles built to order by its fleet conversion centre in Sheerness, Kent. Modifications can include canopies, lights, beacons, graphics and racking. Two vehicles built for Network Rail will have handwash centres and hot water boilers with power inverters and air suspension. Another for Mitie is equipped with a snowplough coupled with a multipurpose bracketry system. As the modifications are built by the OEM, they are approved and homologated, so can be taken to any Isuzu UK dealer for servicing, rectification or repair.

The D-Max tipper previewed at last year's show is due to begin production later this year. The aluminium subframe and air suspension is said to offer a payload 'well over' 1t, while not exceeding 3.5t gvw. The vehicle is being converted by TGS (UK) of Bristol.

ORBCOMM 5F65

A new Orbcomm accessory is a cargo camera to be mounted inside a container or trailer (pictured below). This prevents the need for fleet managers to walk into the yard to determine whether a trailer is empty or full. It can autonomously or manually take images of cargo at any point. Another new product is the IS 400 tractor ID sensor, said to prevent a tractor picking up the wrong trailer. The tractor-mounted sensor automatically pairs with a trailer using Bluetooth, and notifies the back office system when trailers and tractors are connected or disconnected. It does require a powered sensor on the trailer, but that is part of the PT 6000 refrigerated trailer telematics system.



For trucks, a new in-cab camera solution, IC 500, captures video images of incidents when triggered by telematics data, such as harsh braking. This way, the fleet manager or driver-trainer just needs to use one system to look at incidents, with telematics data attached, such as speed, distance or hard braking. The device plugs into the BT 500 telematics device which covers telematics, tachograph, driver performance scoring and driver messaging and jobs.



PANELTEX 5A40

Four vehicles are planned: a home delivery vehicle, van conversion, refrigerated rigid and fixed double-deck trailer. The first side-loading internet grocery home delivery vehicle body involves the launch of a new body style offering a 14% payload increase over the current designs. The second 3.5t van conversion is a freezer conversion of a Ford E-Transit. This is one result of an arrangement made last year to build fridge conversions as stock options.

The third vehicle weighs in at around the 14-18t gvw range, and features an integrated body and cab design that Sam Berridge, marketing manager, said is the result of a couple of years' development. He explains: "Historically, it's been a simple process to mount a box on the back and build up in cuboids on top of a subframe. But this is not a walk-though vehicle; it's not a steel vehicle that we've cut a hole in. We have tried to create a single shape, roofline, and single walls, all of it without a cab gap." Key design parameters include decreasing aerodynamic drag.

The fourth vehicle is a fixed double deck, a product that Berridge calls a big growth market, one that the company is returning to after decades spent in LCV. "We have increased capacity in that line specifically to focus on 18-26t and 13.6m trailers, so we have a line of trailers and a line of rigids going constantly now. I think there's an opportunity to bring in very high-quality, high-payload and highly insulated trailers into the UK," Berridge observes. The product is a trunking semi-trailer that operates on a moving loading dock that has a lift. The dual-temperature, refrigerated and ambient trailer provides a cross-docking scenario moving from trunking operations to vans for last-mile delivery.

TEAL 5G43

Over the last two years, Teal has re-engineered its entire four-model vehicle-mounted hot water handwashing sink range (pictured above) to keep pace with the ever-changing vehicle electrical supply available on current and Euro 5/V vehicles. The range includes the Handeman, with a built-in dirty water receptacle, and the Handeman Xtra, offering a larger water capacity. For vehicles where more staff need access to hand hygiene facilities, the range includes the TealWash, with its 5-litre water capacity, and the Compact in stainless steel.

TOTALKARE 4C10

Taking its biggest-ever stand space, 18x30m, the garage equipment supplier promises a different look to previous years. To support its new Class 7 MOT bay products, there will be a light commercial 6.5-tonne capacity four-point lift with a van on (pictured below), as well as a headlamp tester and petrol gas emissions analyser, alongside an in-ground brake tester cassette and a mobile brake tester. Other new products on show include an air compressor and a NAV101 commercial tyre changer, a wheel alignment rig, scissor table and hydraulic press, alongside a range of workshop furniture. More familiar products include a 9m, 25-tonne capacity Y-Mech vehicle lifter, and mobile column lifts (T8 and G8AC washbay lifts).

For those looking to be perked up, an espresso coffee machine is branded with the company's new Commercial Vehicle Podcast (available on Spotify, Apple and Google Podcasts) aimed at workshop managers and engineers. Topics include the point of shaker plates, how to take advantage of HMRC's super-deduction relief, and the differences between in-ground and mobile brake testers. Episodes are published weekly.



SAFETY SEMINAR

Is organisational safety simply a matter of following the health and safety rules? Not according to Sir Moir Lockhead, the co-founder of First Group, whose name graces the safety awards organised by IRTE's parent, the Society of Operations Engineers.

Sir Moir says: "There's a simple message: if you can't do it safely, don't do it."

Past award winners, safety experts, safety leaders and other interested parties will discuss safety in an upcoming seminar. Potential topics include safety leadership and safety management, safety metrics, priorities in transport safety, safety training, evaluation of near misses and learning from incidents. Look out for event details via *www.is.gd/iminuk*

CheckedSafe®

The vehicle compliance system for all fleets

Paperless defect reporting and fleet maintenance, all for **£1 per vehicle, per week**

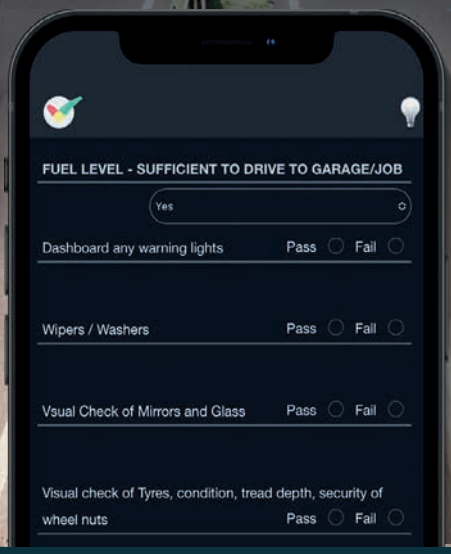

Driver's app

Fleet portal

GPS tags

DVSA compliant

Try free for 30 days at **checkedsafe.com**

or call us on **01282 908 429**



Brigade's Sidescan®Predict is the next generation of side-detection sensor system, designed for collision avoidance between vehicles, objects and vulnerable road users.

Utilising ultrasonic technology, this intelligent system predicts if a collision is likely to occur and alerts the driver by a visual and/or audible warning, depending on the severity of the calculation.

Sidescan®Predict

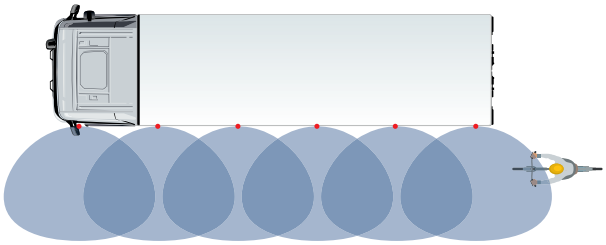

- **Differentiates between stationary and moving objects**
- **Data such as vehicle speed, wheel position and the speed and direction of a VRU feeds an algorithm to calculate the risk of a collision**
- **System in constant operation below 20mph/32kmh, with or without the indicators activated.**
- **Detection area extends up to 2.5m from side of vehicle.**
- **Designed and developed by Brigade**



01322 420300

brigade-electronics.com

You're safer with us



TOYOTA (GB) 4E10

A range of light commercial vehicles from the Toyota professional line-up are on show, including the Proace, Proace City Electric, three Hilux pick-ups, Land Cruiser Commercial and Corolla Commercial (pictured below): a car-derived van with 1.8-litre petrol/hybrid powertrain launched this year. The latter is said to offer an alternative powertrain to fully electric or diesel. In detail, it's a 1.8-litre hybrid petrol engine. Total engine output is 120bhp; loading capacity was not confirmed at press date but expected to be greater than 600 litres, and weight capacity was estimated to be between 400-500kg. Side windows are filmed black, but rear window is transparent, as is a full-height steel mesh bulkhead behind the front seats. The vehicle is claimed to be one of the biggest UK car-derived vans, as well as the first full-hybrid commercial vehicle.

Alongside it will be Proace City Electric, a compact duty van with 150kW battery, offering a range of 168mi with 800kg payload, 3.3m³ cargo space and choice of onboard chargers at 7kW or 11kW. The vehicle, which comes in two lengths, complements the Proace battery electric van, introduced at the end of 2020 that comes in three lengths. Finally, Toyota will highlight the growth in its dealer network, which has risen from 25 in 2016 to 140 today.

TRAKM8 5C10

To ease concerns about the rising cost of fuel, Trakm8 will be showcasing its route optimisation software designed to reduce fuel expenditure and improve fleet efficiency. It will also show how its software can provide data-driven insights that help integrate electric vehicles into a wider fleet. Live Connectedcare demos utilising a live vehicle instrument cluster will demonstrate how fault codes are recorded within Trakm8's Insight fleet management software. They will highlight how the system can help fleet managers to monitor faults across their vehicle fleet, ultimately minimising the risk of unplanned downtime.

Finally, for grey fleets, the Connect 430-S telematics box has a self-install option via the OBD port to provide fleet managers with information on driver behaviour and vehicle status, alongside GPS location data.



in brief

AIR-SEAL PRODUCTS 4A32

The company offers a liquid sealant consisting of water, antifreeze (propylene glycol) and aramid fibres to block air loss from the rim, bead and tread area of tyres. It typically requires about 1.5 litres of product per tyre, to cover the tyre footprint. The mixture, inserted through the air valve, is good for the life of the tyre.

LABCRAFT 5C32

The manufacturer of LED lighting for the commercial vehicle and emergency services sectors has been acquired by US company Safe Fleet, though the Labcraft brand and business will continue to operate as a standalone entity.

LOCKS4VANS 5E70

A larger stand will allow space to mount locks on actual vehicles, which will include two panel vans, one electric, and a pick-up truck. There's a new generation of lock aimed at the box body vehicle with a panhandle form. Also available are narrow- and wide-slat shutter locks.

PROTECTAVAN & TVL SECURITY 5D10

Protectavan kits out vans, overhauling the interior, and sister company TVR Security now offers additional security packs as a factory-fit order via Ford for the Transit and Transit Custom (or as retrofit).

TELETRAC NAVMAN 5F64

The Smart Dashcam, featuring artificial intelligence, will be making its UK transport debut. Forward and driver-facing cameras integrate with the company's TN360 platform. Also present is the company's EV Readiness Tool which guides transport managers through the electrification process.

VAN GUARD ACCESSORIES 5B15

The van accessory manufacturer has released a new and improved second generation of van lock, the ULTILock Hooklock, which has attained Gold Standard Sold Secure status and won Secured By Design product accreditation.

VLT
VLT
VLT®

Leading Manufacturer & Installer of
High Quality Vehicle Testing Equipment

01280 822488 sales@vltestuk.com

Home Of The Roller Brake Tester

Worldwide solution providers of vehicle safety and emissions testing systems

FEATURES AND OPTIONS:

- DVSA Database approval
- STGO (Special Types General Order) Pass/fail softwear
- DVSA connectivity approval for class 4 & 7
- Ruggedised WIFI tough book for CAB operation
- Mechanical roller locking system for easy drive out



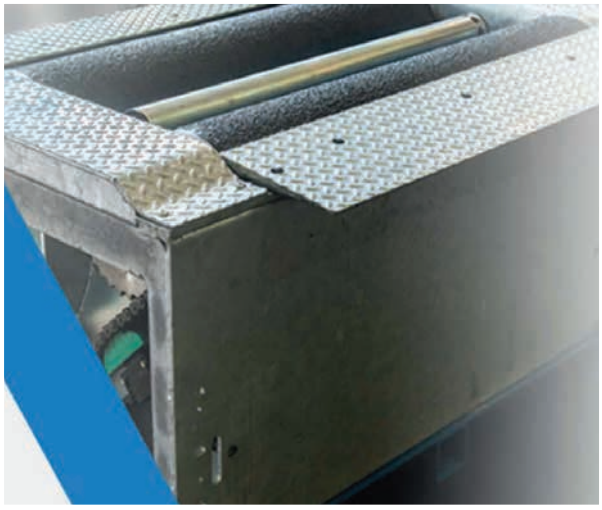



ADVANTAGES:

* Liftime roller warranty
* 5 year waranty on motor gearboxes
* One man operation
* More than 3000 current active UK customers
* Up to 24 Ton axle weight (Model depending)

BENEFITS:

* Manufacture - Sales - Service in one call
* In house nationwide aftersales service
* Dedicated installation and delivery service
* ATF and ADR specialist salesteam

VLT Now Recruiting: Service and Installation Engineers View Online

GEA
THE GARAGE EQUIPMENT ASSOCIATION
www.gea.co.uk

IRTE
engineering success

cpt

www.vltestuk.com



SHAKING OFF THE DUST

Local authorities are turning to outside contractors to maintain their vehicle fleets. Richard Simpson finds out why

Rising vehicle complexity, the rise of electrical drivelines and perhaps most significantly difficulties in recruiting new staff are all leading local authorities to outsource their vehicle maintenance, contends Bob Sweetland, managing director of Specialist Fleet Services. Alongside contract hire, SFS, part of Paragon Banking Group, also offers whole fleet maintenance services to local authorities, covering everything from small equipment to heavy trucks, including around 800 RCVs.

"It's our role to make sure that the required number of vehicles are available to the contracting authority at the right time every day," Sweetland says. He explains that some local authorities are struggling to run their own workshops, with staff recruitment, training, and retention key issues. "Inflexible pay structures often don't reflect what good technicians can earn elsewhere," he says. "We can pay realistic rates, and we also are big fans of apprenticeships. We have some staff with 10 years or more service with us who started as apprentices, plus we also recruit technicians from franchised dealers' and manufacturers' workshops. Council outsourcing to us is driven more by our technical expertise than financial advantage."

SFS runs 12 workshops nationwide, including some local authority premises that it has taken over. Employees are TUPE'ed over and retrained to SFS standards.

Specialist knowledge means SFS is well-placed to maintain RCV fleets, says head of engineering, Pete Lowe. Scheduling is complex, because RCVs work far harder than the distances they cover might indicate. "PMIs take place every six weeks, but the service intervals for engines and bodywork have to be based on operational hours," Lowe explains. "Typically, the engine oil change interval will be every 600 hours of running. Body servicing, too, is hours based. A vehicle may only travel for two hours in a shift, but the body will be in operation for eight hours."

Electric vehicles are another challenge, says Sweetland. "Many local authorities have declared 'climate emergencies' and want to transition to battery-electric vehicles.

"But they struggle to get their heads around the recharging infrastructure, and that anyone involved with maintaining the vehicle will need training. Even if you aren't working directly on the high voltage side, you need to know what you can do without disturbing the HV (high-voltage) system, and whether the batteries will need to be isolated or drained."

OEM VIEWS

At Dennis Specialist Vehicles, aftermarket director Geoff Rigg is happy to let the customers do what's best for them. "If operators provide their own R&M services in-house and it works totally efficiently, that may well be the cheaper option for them. There would be no point in them sub-contracting if it ran with 100% efficiency.

"But things rarely run smoothly, and those who come to us and ask us to take this function on are often those who have problems of some sort – normally problems with staffing, with costs, with compliance, or with existing contractors."

Dennis will take care of the whole fleet, maintaining everything from wheelbarrows to trucks. Rigg says: "We provide solutions. We aim to improve service levels and increase vehicle uptime, based on excellent



"PMIs take place every six weeks, but the service intervals for engines and bodywork have to be based on operational hours"

Pete Lowe

engineering and preventative servicing and maintenance. From our perspective, if our staff on the ground look after the engineering side of the operation, the balance sheet looks after itself.

"The main thrust of what we're doing is to guarantee frontline vehicles. They must always be available for the start of a shift. When they need attention, our engineers stay and work on them until they are fixed, and if there is a problem we can't resolve in time, we provide a suitable replacement vehicle.

"We have more than 80 field service engineers scattered across the UK. They also provide a valuable resource to draw on when there are staff absences, as there have been with people having to isolate throughout the pandemic. As the labour market has got even harder, we're expecting more and more operators to turn to us. Recruitment, retention and training are a challenge for everyone, but with our resources and experience, we are in a position to take care of that and ensure there are always enough well-trained engineers to do the job."

Of the mainstream manufacturers, Mercedes has one of the largest shares of the municipal market, with the Econic RCV chassis being sold alongside Arocs, Unimog and Fuso. Ross Paterson is head of Mercedes-Benz special trucks and points out that all of Merc's 74 British franchised workshops can handle the Econic. He says: "The electrics and electronics are common with the Mercedes A-series models, as are the drive axle, suspension and the 7.7-litre engine. The Allison transmission is pretty much unique to the Econic RCV, as is the cab, but apart from that, most systems are common to all Mercedes trucks."

The biggest difference is how the vehicles operate, and this is reflected in the aftercare packages on offer. "Seven years of frontline service with the original operator is normal, and we can support the vehicle for up to eight years with a full R&M package, backed by a maintenance and inspection contract that will take it to 10 years.

"We believe the best place to maintain a Mercedes is a franchised Mercedes workshop with all the necessary tools, equipment and parts to hand. And we can include the collection and return of vehicles for service and inspection in the contract. If the customer prefers, we can take over their premises as a managed workshop facility and kit it out to Mercedes standards, but these arrangements can be quite complex.

"Mercedes would not normally repair specialist refuse bodywork, as the UK body specialists all have excellent service networks of their own. But we can carry out routine maintenance such as lubrication. We can bundle LOLER inspections for equipment like bin-lifts into our service arrangements, just as we do with tail-lifts on delivery trucks."

Given the specialist nature of the vehicles, the Unimog network is smaller, with 24 service points. R&M contracts are still available for up to eight years, with a three-year warranty standard. TE

WINTER SERVICE

Arguably, no one understands the fleet engineering challenges of winter better than Jonathan Lupton, director of operations at Econ Engineering, which not only manufactures gritting and snow-clearing kit, but also maintains a hire fleet of 1,000 vehicles.

"Peak season is from October to March, and we hire our trucks out for a minimum period of 26 weeks," he reports. "But we can extend that, if we get a cold April, as we did in 2021.

"When the vehicles come off-hire they are inspected unwashed (this make it easier to spot faults such as oil leaks), then given a full chassis-wash.

"Then they are over-maintained! Every brake is stripped, cleaned, inspected, lubricated and reassembled with new parts as necessary. Drivelines get a full service with every filter changed."

Remedial paintwork is carried out, and the body, including the conveyor, spinner and pre-wetter, is serviced.

"The spreading mechanism has to be calibrated to road speed in much the same way as a tachograph is," he says.

Tachographs themselves are recalibrated during the summer, irrespective of the vehicle's 'birthday', as downtime must be minimised during the spreading season. A coat of grease is applied, the vehicle is put into storage, and the batteries are disconnected.

Recommissioning starts in August. This involves a road test, brake testing and a six-weekly inspection prior to departure. Any chassis manufacturer upgrades or recalls are also completed, and tyres replaced if they don't have sufficient tread to safely complete another season. Regular six-weekly inspections are scheduled for the hire period, but otherwise the approach is to maximise availability in the spreading season.

"Becoming an SOE Corporate Partner has enabled me to access a valued range of discounts translating into meaningful savings."

Brian Beacon, UK Manager,
V L Test Systems Ltd

Society of Operations Engineers

IRTE Professional sector

GROW YOUR BUSINESS WITH CORPORATE PARTNERSHIP

- Preferential membership and registration rates for your employees
- Approval and certification of your CPD and training schemes
- Special discounts for exhibiting at the CV show and Workshop Accreditation
- Enhanced visibility through our network and Transport Engineer's media support package



BECOME A CORE OR PREMIUM PARTNER TODAY

t: +44 (0)20 7630 2174
e: corporatepartners@soe.org.uk
w: soe.org.uk

"The industry is painted as male dominated, and it is, but if I hadn't taken the chance and done a work placement, I don't know if I would have proceeded with it. I love it, and I'm not changing careers now"

All in the family

Trucks are in the blood of the Simmons family of Leicester, including third-generation Jess Simmons, an apprentice at Midlands Renault dealer RH Commercial Vehicles (RHCV) in Leicester. Interview by Will Dalrymple

Simmons grew up around trucks. Her father, a truck driver, for a time operated his own company, John Simmons Haulage, which followed in the footsteps of his own father's firm, John C Simmons Haulage. "If I had been a boy, I would have been called John," jokes Jess.

So she was exposed to commercial vehicles at an early age, and, handy with tools, she developed an interest in how the vehicles worked and operated. Having witnessed first-hand the stresses and strains of driving, she focused instead on maintenance. That originally manifested in a desire to work on construction plant and machinery, but a week's work placement at Mercedes-Benz dealer Mertrux, organised by a careers fair at her school, changed her mind.

"The industry is painted as male dominated, and it is, but if I hadn't taken the chance and done a work placement, I don't know if I would have proceeded with it. I love it, and I'm not changing careers now," says Jess.

She nearly gave up working in the industry entirely after facing some opposition in her early career. However, she was determined to not be beaten. Moving to RHCV has given her the confidence to continue in this field. "I love it here because no one judges you, what gender you are, you don't get any judgement here; everyone's always friendly and willing to help out."



Now, Simmons is in the third year of what should have been a three-year Level 3 heavy goods vehicle service maintenance technician qualification. But COVID-related delays, and Renault's switch to training provider Remit, have extended the duration of the training.

Day-to-day work includes shadowing other technicians and carrying out inspections, servicing brakes and performing diagnostics. "Whatever the fault, I attempt it myself, and if I haven't got the training, I ask for help," Simmons says, adding that there's no shame in that. She lists as challenges the time pressure on repairs, and the increasing extent of electrics in HGVs.

In addition to honing her skills on commercial vehicles in the garage, the young apprentice is also training for the driver's seat in her free time. Having recently passed theory tests, she is currently awaiting a Class 1 practical date. Part of the benefit would be to be able to carry out road tests of repaired vehicles – although the workshop has a driver on call if needed. She admits her motivation goes beyond vocational need: "Having a licence has always been a dream. Although I don't see myself not being a mechanic, I'd like to have the option all the same."

The only problem she faces now at work as a female technician is finding well-fitting PPE. "I haven't got tiny feet, nor massive feet. But it's impossible to find size five boots. So I take size six and double-sock. As the overalls here are made to measure, they do fit properly."

Despite having faced a difficult experience, she encourages female candidates to consider engineering. She says: "Definitely give it a chance. There are companies that treat you the same, and where everything's equal. The problem with this industry is there is a lot of sexism, and there are a lot of companies that will knock you down, but there are also amazing companies like RHCV that will offer you a chance and give you an opportunity. After my last job, I was willing to give it all up, but I got this [job], and it was the best decision I ever made." TE



IRTE Skills Challenge 2022

NOW OPEN!

The Skills Challenge is the ultimate contest for teams of PSV apprentices and technicians who specialise in:

- Bodywork
- Electrical
- Mechanical

Get involved #IRTESkills

Enter by 11 April at irteskills.org.uk to show us what you can do

PREMIUM SPONSORS

ALEXANDER DENNIS

FCL ORGANISATION

KNORR-BREMSE

TENGTOOLS

SPONSORS

IMPERIAL ENGINEERING SINCE 1964

PremierPits COMMERCIAL VEHICLE PITS

Visit **irteskills.org.uk** Call **+44 07535 651167** Email **irteskills@soe.org.uk**



© UllrichG - stock.adobe.com

Stopping rollaway

Done correctly, coupling tractors and trailers should not pose a problem for any driver. But it only takes one slip to let up to 44 tonnes on the move without anyone in control, writes Lucy Radley

Vehicle rollaways (or runaways) are such a regular occurrence that, in 2015, HSE published a specific consultation on the issue: Establishing direct and contributory factors to the uncontrolled movement of Heavy Goods Vehicles (HGVs) during coupling and uncoupling. This study surveyed a mixture of drivers, operators and supervisors; examined those incidents reported to HSE under RIDDOR; consulted with trade associations and manufacturers, and conducted detailed interviews with a small number of each.

The authors found that forgetting to apply the cab handbrake/trailer parking brake due to distraction was the primary reason for vehicle rollaway incidents during coupling. In the case of trailer parking brakes, this was often due to a mixture of "complacency and the adoption of bad practices over time". "Lack of technical knowledge and poor appreciation of risks" were another major factor, along with inability to locate the trailer park brake, inadequate training and operational pressure leading to drivers feeling they had to rush.

Maple Fleet Services was somewhat ahead of HSE in conducting research, however, and already sold an audible handbrake warning device for vehicle cabs, according to account manager Stuart Taylor. As he tells it, one day back in 2010, there was a knock on the door from a driver, with an idea for a product. He had experienced a rollaway, and come up with a prototype for what would eventually become SafeConnect.

RED LINE

"He was a clever bloke, because he'd worked out the reason for the rollaway was the red line," Taylor explains. "Everything else was just noise." It doesn't matter what actually happens – whether the truck or trailer park brake isn't engaged, or why that might be. None of this really becomes a problem until the red emergency airline is attached, because that is what pressurises the circuit, releasing the service brakes.

The solution was to fit a fail-safe device which ensured that, regardless of what buttons were or weren't pressed, and levers were or weren't pulled, the trailer spring brakes would not disengage until the driver got into the cab and depressed the foot brake.

Adds Taylor: "What's really intrigued me is the mindset and misconception around why the incident happens, and how you might try to fix it."

While distraction is top of the list of causes, misunderstanding of the engineering behind what drivers are doing is also a large component. When Taylor has gone out and talked to drivers, he has found that they know what they need to do, but not necessarily why it matters or how it works.

The belief that all modern trailers have automatic spring brakes which apply when the red line is 'pulled' is a common explanation for failure to push the park brake button, for example. Many drivers don't understand that air in the system is what holds the brakes on, rather than off. Then they leave a trailer parked on air alone and, once it gets rocked in the wind and the remaining pressure in the system is exhausted, the vehicle will be able to roll again. That's why additional spring brakes exist.

"But even when we look at a park brake being used correctly, it's only half of the problem and half of the solution," Taylor says. "The amount of times people tell me they don't need our product because they have automatic



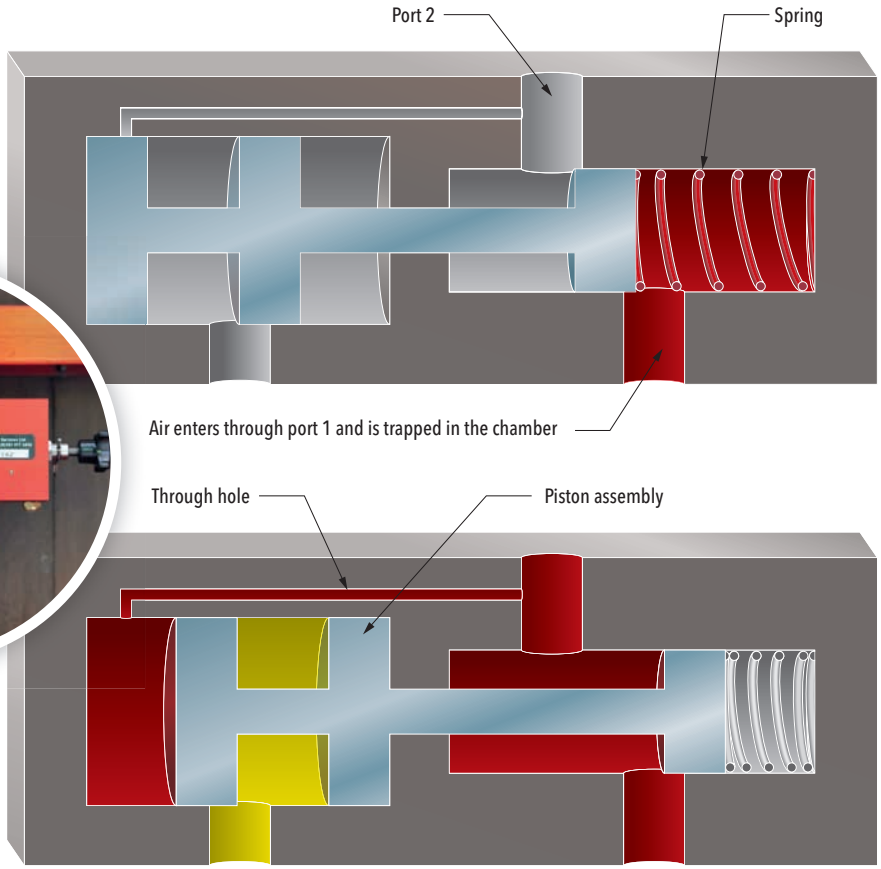

spring brakes on their trailers is beyond funny. Next time you couple up to it the trailer brake will be on, great, but you're going to disengage that park brake when you are either on the catwalk or the nearside of the trailer."

If the tractor handbrake has been forgotten, the driver will be nowhere near it when the outfit starts to roll. "Instinct dictates that, when that happens, we try and run to the cab and put our hand or foot on the foot brake, which is why the majority of fatalities we see in rollaways are crushing incidents."

The HSE consultation found 72 RIDDOR records between 1 April 2001 and 20 March 2014 which involved uncontrolled movement of an HGV. Eight of these were fatal, and another 30 resulted in major injuries. But Maple suspects that the number of near misses is far, far higher than this data suggests, simply because talking about them is such a taboo subject. "Imagine you as a driver have a rollaway, and don't damage the vehicle, nobody's injured and you think nobody saw it," Taylor says. "Are you going to walk into the office and tell them what happened?"

MITIGATIONS

This is where devices which automatically stop the entire truck and trailer outfit come in. There are several aftermarket options out there: Vision Techniques' BrakeSafe system, for example, automatically applies the handbrake if a driver tries to get out of the vehicle without doing so. Bendix has Intellipark, which uses interlocks in areas like the seatbelt or cab door to do the same thing. Both of these are electronically engineered, and are fitted to the tractor unit.

Maple's SafeConnect consists of a simple valve and a spring mounted on the emergency line of the trailer, after the park/shunt valve (pictured above). This valve automatically closes when the trailer is dropped, as that part of the system is exhausted when the red Suzie is removed (top image). Feeding into it is a small pipe from the service/yellow airline, which is tapped using a T-piece. The only means of opening the valve is with a signal down the service line, which can, in turn, only be delivered when the driver returns to the cab and depresses the service brake.

The key decision operators must make is whether to fit a preventative measure or a deterrent. An audible handbrake warning which plays a recorded message – something Maple also still sells – relies on the driver actively responding, whereas passive systems like SafeConnect work regardless of what other environmental distractions might be present. Automatic spring brakes serve as something of a halfway house: their deployment is automatic, but they must then be actively disengaged from outside the cab.

Some argue that by taking control away from the driver, such systems encourage laziness or lack of attention to detail. The counter-argument is that passive systems are a pure fail-safe – they can do their job without the driver ever being aware. Ultimately, it is for operators and fleet engineers to decide which option is best for their specific situation and fleet. TE

DUAL SYSTEM

Swedish brake manufacturer Haldex's Trailer Control Module+ (TrCM+) and the new, more technically streamlined and lower-cost Trailer Emergency Module (TEM) now include Safe Parking. Designed to automatically apply the trailer spring brake during both uncoupling and in the event of a complete air pressure loss, Safe Parking ensures the spring brake actuators must be manually released using the park valve before the vehicle can then be moved. TEM can be used for all trailers with ABS and Haldex's EB+ electronic braking system, and is available in both single-knob and dual park-and-shunt valve versions.

OFFICIAL **IRTE** JOURNAL

TRANSPORT ENGINEER

COMING UP IN THE MAY ISSUE OF TE

IN READERS' HANDS BY 5TH MAY 2022

COPIES ARE DELIVERED TO THE READERS' HOME ADDRESSES AND NOT TO THEIR OFFICES

- Emissions control
- Tractor units
- Garage ad workshop equipment
- Fleet management
- Legal update
- CV Show updates

Follow us on twitter @TransEngineer and read our daily news at www.transportengineer.org.uk

TruTac is ER-accredited

DVSA EARNED RECOGNITION

We are talking...

Compliance Control & Fleet Efficiency!



"TruTac and Microlise software products have together improved numerous aspects of our compliance control and fleet efficiency. Quite honestly, I can't think of other systems which could compete!"

Jon Mayes. *Managing Director, AD Fuels.*

TruTac
Complete Compliance Control

024 7669 0000
info@trutac.co.uk
www.trutac.co.uk

Part of the Microlise Group

microlise
+44 (0)1773 537000
www.microlise.com

BEST SOLUTIONS FOR **MAXIMUM SAFETY**

Our mission: to develop the best testing and lifting equipment in the market

Our vision: a world where mobile transport is safe and environmentally-friendly



BRAKE TESTING



LIFTING



AXLE/PLAY DETECTION



VEHICLE TESTING TECHNOLOGY



HEADLIGHT TESTING

We are passionate about achieving extraordinary things

WWW.MAHA.CO.UK

MAHA U.K. Limited
1, Europa Way, Wisbech, PE13 2TZ
Phone: 01945 580061
Email: sales@maha.co.uk

MAHA

in brief

Totally Local Company (TLC) has specified 32-tonne tipper-grabs with Econic cabs, to be supplied by North West dealer eStar Truck & Van.

Bristol-based **Eurotaxis** has returned to Stertil Koni to purchase a four-post type ST4070LV lift for use in its new workshop.

South Street Motors invests in Maha LCV workshop equipment, including a 6t-capacity Boston Class 7 four-post lift with LED under-vehicle lighting and Majorlift 2.8t jacking beam, and Maha MBT 2250 Class 7 connected brake tester with dynamic weighing.

International haulier **BH Cecil & Sons** has taken delivery of a Krone Profi Liner curtainsider specially adapted to accommodate a DAF 3.1m wheelbase tractor with tag axle, thereby keeping within the overall Euro vehicle length limit of 16.5m.

Wilrose Environmental, an operator of commercial waste collection services, purchased its latest low-entry waste collection truck, pre-bodied and ready to work, from supplier Refuse Vehicle Solutions (RVS).

Caledonian Logistics has opted for Mercedes-Benz Actros trucks in rigid and tractor unit form. The Aberdeenshire-based company's 35 new vehicles are being supplied by local dealer BLS Truck & Van on contract hire.



Victoria Boyle breaks down barriers at Legion Scaffolding

On International Women's Day, Victoria Boyle is doing her bit for gender equality after taking on the responsibility of transport manager at Legion Scaffolding, which was established by her brother Daniel in 2012. She worked initially as his personal assistant before stepping up to become company secretary. Then, after a vacancy arose for a new transport manager, Victoria jumped at the opportunity. "I told Daniel I really wanted to have a go at managing the fleet and he agreed to back me," she recalled. "Although times are changing, it's not a job in which you'll find many women. But I've always worked in male-dominated environments – I've sold cars and was also a shift manager at DPD, for example – and it suits my character. I knew I could make a go of it."

And so it's proved. She participated in an intensive two-week training course at Essex Driver Training in Battlesbridge last summer, at the end of which she passed an examination to secure her transport manager's Certificate of Professional Competence (CPC) qualification from CILT.

She added: "I love being a transport manager. It has its frustrations like any job, particularly because it feels as though the rules and regulations around compliance are constantly changing. But we have a great team of drivers and our Mercedes-Benz trucks are fantastic."

Legion Scaffolding remained busy throughout the pandemic. The company recently relocated to a new yard in Brentwood, Essex. Meanwhile, it has just taken delivery from local dealer Motus Truck & Van of three new Mercedes-Benz Actros 18-tonners. They represent something of a milestone in being the operator's first new trucks – it has previously acquired used vehicles, including the Euro V Axor rigids that have been stood down to make way for the new arrivals.

German states select Tatra pumpers

Brandenburg and Mecklenburg-Western Pomerania have started to take delivery of 46 Euro VI Tatra Force 815-7 4x4 forest fire pumper vehicles, equipped with Allison 4500 Series fully automatic transmissions, following a Europe-wide open tender.

Both states have large, forested areas and have experienced numerous, and in some cases devastating, forest fires in recent years. As former military training areas with the possibility of ammunition in the ground (legacies of former ammunition depots from the Second World War), firefighting efforts are significantly hampered.

The Tatra Force 815-7 4x4 has a TLF-W body type 'Brandenburg' from Czech bodybuilder, THT Polička. It is powered by an Allison 4500 Series fully automatic transmission and a 6-cylinder Euro VI Cummins diesel



engine rated at 386bhp. The 18-tonne truck reaches a maximum speed (limited) of 62mph.

The all-wheel drive delivers off-road capability at all times. The TLF-W has a water passage capability of 110cm and is able to drive through water up to 110cm. It has a gradient-climbing capability of 78%, equivalent to approximately 38°. The extinguishing water tank holds 4,800 litres and an additional 180 litres of foam compound. The pump-and-roll function enables extinguishing operations to continue while the vehicle is in motion.

Following successful testing and approval, the first vehicle was handed over to the Kolkwitz municipal fire brigade on 8 February at Tatra Force's manufacturing plant in the Czech Republic. Eleven vehicles are destined for Mecklenburg-Western Pomerania and 35 for Brandenburg, where they will complement existing units.

Brandenburg required these special vehicle properties in order to maximise the vehicle's robustness, off-road capability and power, while at the same time providing enhanced control and comfort for the crew. Moving an 18-tonne truck quickly and efficiently in extremely rough terrain requires complete transfer of engine power and torque to the wheels. Allison says the transmission, with its torque converter and full-power shifts, provides acceleration and constant traction.

Solomon Commercials delivers 33 aerodynamic vehicles for Birchalls

Burnley-based Birchall Foodservice has commissioned Solomon Commercials to provide a fleet of 33 of its Slipstream vehicles.

The food wholesaler took delivery of seven MAN TGM 18t vehicles in June last year but has placed an order for more vehicles.

In January, Solomon Commercials supplied Birchalls with two MAN TGE 3.5t Slipstream side bodies which have been built bespoke to the food wholesaler's requirements, but the order will see an additional 20 MAN TGM 18t full Slipstream Multi-Temperature trucks, six MAN TGE 3.5t featuring the Slipstream side entry bodies and five of the MAN TGL 12t vehicles by June.



Justin Birchall, managing director of Birchall Foodservice, said: "A progressive business such as ours needs to ensure our fleet performs well while having the optimum capacity and minimising environmental impact through using innovative aerodynamic bodies."

Acklea's plastic body now includes tail-lift



Traffic management vehicle specialist Acklea has extended its range of recyclable plastic-bodied 7.2t commercial vehicles with a new tail-lift model, which is said to be suitable for use on slower urban and rural roads as well as the UK's high-speed road network.

Created for highway service provider Ringway Jacobs, this has been designed as a dual-purpose vehicle, both for the installation of a lane closure or for the deployment of temporary traffic lights. The payload capacity enables it to carry twice as much as a typical 3.5t vehicle.

The result is that, according to Acklea, the vehicle can replace multiple 3.5t traffic management vehicles and trailers on typically narrower, slower roads.

A recyclable copolymer plastic body makes this family of 7.2t vehicles as lightweight as possible and reduces both fuel consumption and emissions.

Acklea says that its modular design can reduce whole life costs by up to 30%. Using durable, recyclable copolymer plastic means the bodies can be reused with a new chassis and cab. This increases the lifespan of its reusable parts into a second or potentially third life.

The material is lightweight, low maintenance, zero corrosion, heat and chemical resistant, and impact resistant.

The truck is based on the IVECO Daily 7t chassis, with simple, van-like driving controls and a Hi-Matic transmission, and offers various health and safety features including Axtec on-board weighing system, Motormax vehicle warning and camera system, vehicle immobilisation interlock when the tail-lift is not stored securely, LED illumination, non-slip floor, galvanised fall protection rails and powder-coated dropsides.

David Bonehill, head of fleet at Ringway Jacobs, explained: "We needed a new kind of traffic management vehicle for our work on rural and urban roads in Cheshire East, and Acklea has delivered a remarkable unit that is able to replace multiple vehicles.

"It also means we're using a bespoke vehicle rather than relying on a traffic management truck built for motorway usage that might not have the right equipment for our needs," he added.

in brief

Novadata's new Driver CPC course, 'Actions After an Accident or Breakdown', has been specially devised to promote increased safety for drivers, passengers and other road users following a breakdown or accident on the nation's roads. Usefully, it covers similar advice to that given in the national 'Go Left' campaign launched by National Highways (formerly Highways England) in March 2021.

Volvo Trucks has refined its I-Save concept on its FH tractors to try to lower fuel consumption and give substantial savings in CO_2 emissions, while simultaneously improving driveability for a more enjoyable ride. I-Save covers engine optimisation, control software and measures to reduce air resistance with the goal of increasing energy efficiency.

ContiConnect 2.0 is a new version of Continental's digital tyre management system, developed from scratch to digitally track the remaining mileage, tread depth and condition of all the tyres.

Webfleet Solutions has partnered with mapmaker and location technology specialist TomTom to launch the Webfleet Work App and TomTom Go Fleet App to tackle issues around route compliance, on-time deliveries and safety concerns. Webfleet Work App empowers professional drivers with only their Android mobile devices.

WOLDS WAY TRAINING

Is your Workshop Accreditation or your technicians due for renewal after the extension due to Covid?

Call us on:
Brian Colulson: **07986 519799**
Nigel Powley: **07807 211435**

E: info@woldsway-training.co.uk
W: www.woldsway-training.co.uk

Woldsway Training is an independent training and accreditation company formed in 2019, based in East Yorkshire and cover the whole of the UK.

We will cover shift patterns to minimise the impact on your business

Workshop Accreditation (3-year licence) on behalf of the Institute of Road Transport Engineers.

Technician Accreditation (5-year licence) on behalf of the Institute of Road Transport Engineers (administered by the IMI).

Bespoke training courses can be developed in conjunction with your business needs.

irtec

Follow us on: facebook.com/woldswaytraining/

sqe Corporate Partner



WHAT'S IN A NUMBER?

In our case it's trust.
Because Transport Engineer is independently verified by ABC, our advertisers know they're getting the exposure they've been promised.

Our circulation is 12,635 for the period January to December 2021.

ABC. See it. Believe it. Trust it.
To advertise call Craig Molloy on 01322 221144.

IRTE OFFICIAL JOURNAL TRANSPORT ENGINEER

abc www.abc.org.uk



ROLL WITH IT

New developments in tyres and wheels for commercial vehicles

1 GOODYEAR ▼

The first sustainable reality survey takes in 92 UK fleets. Three in five (61%) have put formalised sustainability objectives in place, while a further 27% expect to do so within the next 12 months. When asked why they viewed sustainability as important, nearly two-thirds (63%) responded that their interest stemmed either from concern for the environment or their corporate values. Comparatively, a much smaller number suggested that their concerns were purely business related. Among the most popular solutions already being used by respondents to improve the sustainability of their fleets are fuel-efficient tyres (67%).

www.is.gd/vucilo



2 MICHELIN ▼

Michelin has secured a new three-year Effitires contract to supply, fit and manage the tyres across the Fred Sherwood Group's entire HGV fleet – totalling in excess of 650 trucks and trailers. It will be utilising Michelin's X Multi regional range for the trucks and trailers that operate predominantly on the road, and Michelin X Works fitments for its on/off-road fleet. As part of the new deal, dedicated Michelin technicians – who will be located on-site at the group's two main depots – will fit and maintain the tyres as well as carrying out regular fleet checks to help reduce downtime.

www.is.gd/vatopa





3 BRIDGESTONE ▲

A series of free, downloadable e-books covering tyre care and maintenance and tyre components and their markings has been published online. Each document is designed to cut through the jargon and provide straightforward tyre husbandry advice which can be kept in mind for future fleet maintenance.

"Our Keeping You on the Road e-books are designed with all fleet operators in mind, offering practical, time-saving tips to ensure their fleets are moving safely. They've been created to make tyre maintenance even more manageable, offering valuable advice and solutions," says commercial and solutions marketing executive Gresia Cabrera.

www.is.gd/okusav

4 RL AUTOMOTIVE ▲

AutoAlign – recently launched in the UK, following a £2m/24-month development project and part funded by UK's Clean Air Programme – is a dynamic and unique real-time vehicle monitoring module designed to combat the problem of wheel misalignment. The preventive solution consists of sensors fitted to the steering axle to detect wheel misalignment as soon as it occurs. RL Automotive's cloud-based servers automatically alert fleet managers so that they can take remedial action, saving fuel costs and excessive vehicle emissions.

www.is.gd/rupenu

5 CONTINENTAL ▼

The Conti EcoRegional Generation 3+ tyre line has been updated for use in mixed regional and long-distance haulage. It has been developed for journeys involving multiple deliveries over the course of a day, driving in heavy traffic and winding roads. The tyres' chief characteristics include reduced rolling resistance and superior fuel efficiency. Euro tyre label ratings for fuel efficiency and wet grip are B/B for four steer (HS3+) sizes and C/C for two drive (HD3+) axle sizes.

www.is.gd/robige



OFFICIAL IRTE JOURNAL
TRANSPORT ENGINEER

LEGAL UPDATE

This page is brought to you by specialist transport law firm Backhouse Jones. It holds regular virtual events: see *www.is.gd/opehej*

Local appeals offered for heavy vehicle annual tests (MOTs)

REGULATORY

DVSA has introduced a local appeals process for lorry, trailer and bus/coach annual test (MOT) results. Vehicle operators will be able to ask DVSA to review part of a test or the test result, without having to make a statutory appeal. This is being done so it can offer a quick review of an annual test decision and provide a consistent service to ATFs.

Apparently, if the person presenting the vehicle for annual test is not able to discuss or resolve any issues at the time of the test, a local appeal can be made. To register a local appeal, the presenter/operator can either send an email to technicalofficers@dvsa.gov.uk or ring the customer service centre (0300 123 9000, opt 1).



The local appeal should be registered within two working days of the test result (excluding weekends or bank holidays). Those making a local appeal by email should include: the vehicle registration/trailer ID and VIN number, the date and time of test, the ATF name, the address and phone number of the presenter/operator, details of the disagreement, and the customer name and address.

DVSA is meant to contact the appellant within two days of receiving the request with further details, and arrange a re-inspection if required. Only failure items will be checked, not the whole vehicle/trailer.

DVSA aims to complete the local appeal within five days and to produce a report to indicate whether the original decision stands, or a new decision has been made. The outcome will be recorded against the vehicle or trailer and sent to the person who made the appeal.

Operators still have the right to make a statutory appeal to the secretary of state at any time during this process by using form VTG17 or VTP17. Making a local appeal will not affect any later statutory appeal.

Fact File

TIME OFF ON TACHOS

Did you know you now have to record your holidays and sick days on your tachograph records? This is just one of the changes to the tachograph record keeping obligations for drivers of vehicles covered by the EU tachograph rules that came into force in August 2020, but which most drivers and operators are still unaware of.

There has been no official guidance of substance from anyone, including the DfT or the Office of the Traffic Commissioner, and the change has not been widely publicised.

From January 2022, DVSA has changed its approach to the changes and has been enforcing them both at the roadside and during operator investigations. It is perhaps therefore no surprise that Backhouse Jones is now receiving numerous queries from operators.

REGULATORY

EU posting declaration portal now available for use online

The EU posting declaration portal (previously referred to as EU posting of drivers portal) is now available to use. From 2 February 2022, new EU rules mean that operators performing loaded goods journeys in and between European member states (cabotage or cross-trade) may need to register information digitally about their journeys. The new web-based portal can be accessed via *www.is.gd/jesada*.

REGULATORY

New N1 IVA

The N1 (light goods) IVA inspection manual has been updated. The changes are being made to section 25 (headlamps) along with updates to some other sections. The changes clarify the requirements for headlamp cleaning and self-levelling devices as part of the installation standards for dipped beam headlamps. The update will also clarify the standards for the components needed. In some cases, the change may require additional evidence relating to components and/or installation such as a test report or certificate of conformity. It is available via *www.is.gd/ofecir*.

REGULATORY

New COVID rules

From 1 April 2022 the government will remove the current guidance on voluntary COVID-status certification and no longer recommends that certain venues use the NHS COVID Pass. It is also updating guidance setting out the ongoing steps that people with COVID-19 should take to minimise contact with other people. This will align with the changes to testing, as it will no longer provide free universal testing for the general public in England. It will also remove the health and safety requirement for every employer to explicitly consider COVID-19 in their risk assessments, and replace the existing set of 'Working Safely' guidance with new public health guidance.

The changes recommend, rather than require, that individuals with coronavirus stay at home. This is likely to lead to potential conflicts with staff.

Society of Operations Engineers

IRTE Professional sector

START YOUR JOURNEY TO ENGINEERING COUNCIL REGISTRATION

Members of the Society of Operations Engineers, IRTE professional sector, are eligible to apply for Engineering Council registration. Depending on your qualifications and experience, we are able to offer:

Engineering EngTech Technician

IEng Incorporated Engineer

CEng Chartered Engineer

WHY SHOULD YOU REGISTER?

- Formal recognition of your knowledge and skills
- Improved career and salary prospects
- Validation of your annual CPD

Associate members, who meet the requirements, may also apply for professional registration and upgrade to full membership.

Talk to us today: t: +44 (0)20 7630 1111
e: registration@soe.org.uk w: soe.org.uk/EngC



We are issuing a Top Hat badge to all newly-registered EngTechs. The Top Hat lapel pin will signify your status as a professionally registered engineer, wear it with pride.



To find out how you can get your badge, please email the membership team at **registration@soe.org.uk.**

VEHICLE LIFTS | BRAKE TESTING | DIAGNOSTIC EQUIPMENT | VEHICLE PITS | INSPECTION & SERVICE | ONLINE TRAINING

TOTALKARE
WORKSHOP EQUIPMENT EXPERTS

IMMEDIATE DELIVERY ON
MOBILE COLUMN LIFTS & BRAKE TESTERS

+



FOR
WORKSHOP EQUIPMENT
IT'S **TOTALKARE**

REQUEST A QUOTE

ELIGIBLE FOR SUPER DEDUCTION!

With Totalkare's market-leading column lifts and DVSA-approved brake testers, your workshop could benefit from a totally mobile lifting and testing setup. Ask us about our finance options and get immediate delivery!

GET IN TOUCH: T:**0121 585 2724** / **WWW.TOTALKARE.CO.UK**