www.newelectronics.co.uk

newelectronics

24 March 2020

THERMAL MANAGEMENT • DESIGN PLUS • OPTOELECTRONICS • SECURITY

IN A GALAXY NOT THAT FAR AWAY HOW SUCCESSFUL HAS SCIENCE FICTION IN FILM BEEN IN PREDICTING THE FUTURE OF TECHNOLOGY?

New Electronics' weekly eZine features the latest blogs, news, articles and more. To register for your copy, go to www.newelectronics.co.uk

CONTENTS

VOL 53 NO 06

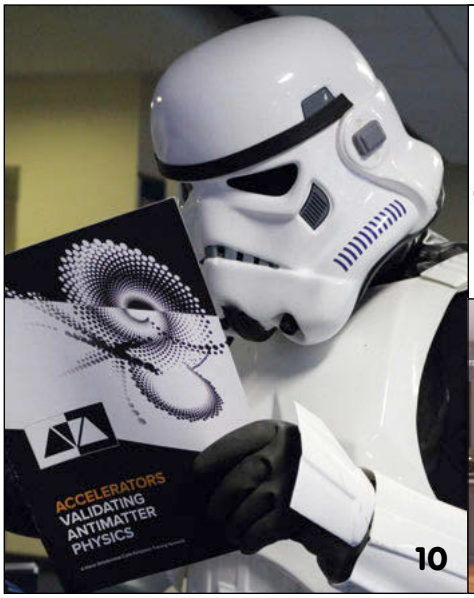

10

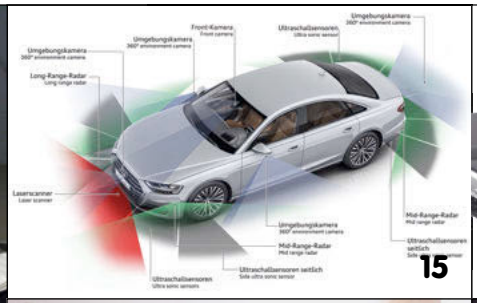
15

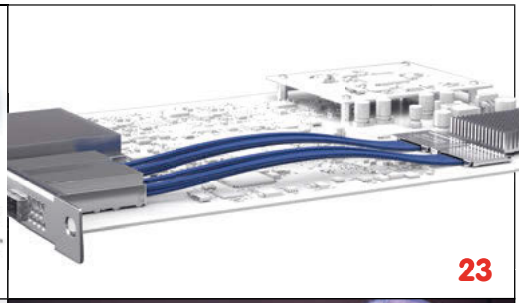
23


26


33

MISSION STATEMENT

'New Electronics keeps designers and managers abreast of the latest developments in the world's fastest moving industry'

A prescient call

WHY EMBEDDING SCIENCE AT THE HEART OF GOVERNMENT IS SO IMPORTANT, EVEN BEFORE THE EVENTS OF THE PAST FEW WEEKS

The UK's strategy for coping with the unfolding coronavirus health crisis had been described as being to "contain, delay, research and mitigate" the spread of the disease, and in doing so flatten 'the curve' of the epidemic and mitigate its impact on the NHS.

While the initial policy of the government has been amended it has been done in response to scientific evidence, as the disease has spread through the population.

At the end of January the Government's Chief Scientific Adviser, Sir Patrick Vallance, gave the annual CaSE Lecture to an audience at the Francis Crick Institute, and his comments on the importance of science and why it needs to be embedded across government were certainly prescient.

While science certainly has a presence in parts of government, it is not universally present, and it certainly needs to become more like economics, a social science, which now underpins all areas of government policy.

The challenge, for Sir Patrick, was how this could be achieved.

It's certainly true that scientific issues have implications for practically every area of policy, whether that's transport, renewable energy, an ageing population, security or emergency issues.

Science has played a role in government since the Second World War but it's really only been in recent years that significant steps have been taken in raising its profile with the formation of UKRI, the embedding of Chief Scientific Advisers in every government department and the size of the Science and Engineering Civil Service Fast Stream set to double.

The Budget, which now seems like an irrelevance, raised funding in government backed R&D significantly, more than many commentators expected.

Sir Patrick looked at the report, 'Realising our ambition through science', and discussed three key themes, critical to the UK making the most of science and through science, innovation.

The first is building science capacity across the civil service and having more people with science and engineering backgrounds in the civil service, the second focussed on ARIs or Areas of Research Interest, in which key themes and questions are explored and finally the importance of using all resources and accessing expertise, wherever it is, to provide the best scientific advice.

We need to create better links with industry in helping to achieve the best possible access to expertise and the government needs to make better use of PSREs or Public Sector Research Establishments, according to Sir Patrick.

He also made the point that UK science is dependent on our place internationally and said that future immigration and collaboration need to be maintained and be as easy as possible to support UK research.

As we, and the rest of the world, battle the terrifying and profoundly disturbing impact of the coronavirus his talk has raised serious and important questions about the role of science in a modern society.

Politicians need to understand and embrace science and should never again be allowed to dismiss the advice of 'experts' or the value of scientific knowledge and expertise.

Neil Tyler, Editor (neil.tyler@markallengroup.com)

> "While science has a presence in parts of government, it is not universally present, and it certainly needs to become more like economics, which now underpins all areas of policy. "

newelectronics

Editor Neil Tyler
neil.tyler@markallengroup.com

Deputy Editor Elliot Mulley-Goodbarne
Elliot.Mulley-Goodbarne@markallengroup.com

Contributing Editors Chris Edwards, Charlotte Hathway, John Walko
editor@newelectronics.co.uk

Art Editor Andrew Ganassin
andrew.ganassin@markallengroup.com

Illustrator Phil Holmes

Sales Manager James Creber
james.creber@markallengroup.com

Publisher Peter Ring
peter.ring@markallengroup.com

Managing Director Jon Benson
jon.benson@markallengroup.com

Production Manager Nicki McKenna
nicki.mckenna@markallengroup.com

ISSN 0047-9624 Online ISSN 2049-2316

Annual subscription (22 issues):
UK £108. Overseas; £163. Airmail; £199.
New Electronics, incorporating *Electronic Equipment News* and *Electronics News*, is published twice monthly by MA Business, Hawley Mill, Hawley Road, Dartford, DA2 7TJ.
T: 01322 221144 E: *ne@markallengroup.com*

Moving on?
If you change jobs or your company moves, please contact **circulation@markallengroup.com** to continue receiving your free copy of *New Electronics*

MA BUSINESS
A MARK ALLEN GROUP COMPANY
www.markallengroup.com

3D ToF sensor-based eye-tracking solution

EYEWARE AND MELEXIS COLLABORATE ON EYE TRACKING SOLUTION FOR DRIVER MONITORING SYSTEMS. **NEIL TYLER** REPORTS

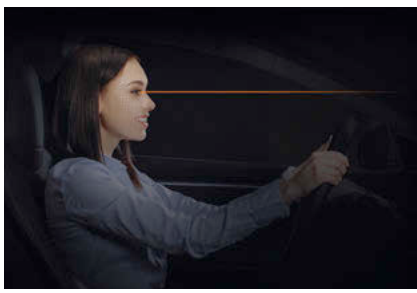

Eyeware, a Swiss 3D eye-tracking technology company and Melexis have joined forces to create an advanced driver monitoring system (DMS).

The DMS leverages Eyeware's attention-monitoring technology and uses Melexis' MLX75027 3D Time-of-flight sensors with VGA resolution, to enable robust eye gaze and head tracking for in-cabin driver monitoring, even in sunlight.

Eyeware uses 3D time-of-flight cameras to overcome the limitations of infrared-based tracking technology. The company's algorithms, using proprietary strategies based on data-driven machine learning approaches, make it applicable in systems using low power, cost-effective and compact sensors.

"This collaboration demonstrates the robustness and wider range of head movements that can be achieved using ToF technology, compared with current driver monitoring systems," said Gualtiero Bagnuoli, Product Marketing Manager, Melexis. "Our MLX75027 3D time-of-flight sensor with VGA resolution, employs a high modulation frequency (20-100MHz) to drive the IR illumination which means the sensor is almost completely unaffected by light, even under changing conditions."

The range data provided by the 3D time-of-flight sensor is used to enhance the reliability of the head and gaze tracking capabilities of the system, enabling it to monitor a very wide range of head movements. The VGA 3D ToF sensor requires a minimal footprint, allowing it to be easily integrated into the rear-view mirror assembly.

"Although the resolution is lower than current driver monitoring cameras, the DMS needs just one sensor to track both driver and passenger," explained Bagnuoli.

Video enhancement technology developed

IMINT Image Intelligence, a specialist in video enhancement software, has joined forces with Qualcomm to develop a new generation of video enhancement solutions that leverage the latest in AI and machine learning.

In addition to AI-based video enhancement solutions, they are also working to upgrade Imint's existing suite of Vidhance smartphone solutions with a new technology that significantly reduces the amount of power that each requires. The power-efficient Vidhance solutions have been optimised for use on Qualcomm's Snapdragon 865 Mobile Platform.

The first results of the collaboration are now available with Imint's Vidhance Selfie Mode solution, leveraging Qualcomm's high-accuracy hardware, keeping smartphone users in the video frame even when they're moving.

They have also developed a "power consumption reduction" technology that is capable of reducing the power required to process video using Vidhance solutions significantly, while accelerating video rendering.

Silicon Labs' IoT acquisition

Silicon Labs has entered into an agreement with Redpine Signals to acquire the company's Wi-Fi and Bluetooth business.

The acquisition, said to be costing Silicon Labs $308million, will include Redpine's development centre in Hyderabad, India, and the company's extensive patent portfolio.

"The acquisition of Redpine Signals' ultra-low-power Wi-Fi and Bluetooth products and extensive IP portfolio will expand our leadership in IoT wireless technology," said Tyson Tuttle, CEO of Silicon Labs. "The addition of these products will drive further momentum in the smart home, industrial IoT and commercial markets."

Wi-Fi 6 (802.11ax) is an important evolution of the Wi-Fi standard to meet the low power, performance, security and interoperability requirements needed in environments with hundreds or thousands of connected IoT devices and Redpine's technology will help accelerate Silicon Labs' roadmap for Wi-Fi 6 silicon, software and solutions. The acquisition also includes Bluetooth Classic IP for audio applications.

A world on lock-down

NEIL TYLER TALKS TO IAN WALLACE, DIRECTOR, EMEA BUSINESS DEVELOPMENT AT **DIGI-KEY ELECTRONICS** ABOUT HOW DISTRIBUTORS ARE COPING WITH UNPRECEDENTED TIMES

It's a critical time for many companies around the globe so my first question to Ian Wallace was what impact was the coronavirus having on delivery times and how much are they being extended by?

"At Digi-Key, our thoughts and prayers go out to everyone impacted by COVID-19 worldwide, and our primary concern is for the health and safety of our team members, customers and business partners.

"While the COVID-19 situation is rapidly evolving and we don't know all of the impacts yet, we do know that our business model positions us with substantial inventory to offer minimal disruption to our customers, and we have worked closely with our multiple carrier partners to mitigate impact on cargo plans.

"We're providing updates and FAQs on our website for our customers and we're in constant communication with our suppliers.

"While these are unprecedented times, we're working to monitor the situation with suppliers and we're getting updates regularly so we can provide any changes in lead times and pricing to our customers.

"Factories in China are slowly getting back up and running, and while it will take some time for them to be back to full production, Digi-Key will continue to invest heavily in providing inventory for our customers."

NT: Turning to other challenges Brexit still looms large. Even if, in the light of the coronavirus, it is delayed what have you, as a distributor, been talking to customers about in terms of how it could impact supply chains, and what are companies looking to do to prepare or pre-empt any problems?

"While the world doesn't know all the implications of Brexit yet, we haven't seen a dramatic impact but will continue to monitor it closely. We do know that our customers want and need solid, reliable supply chain partners so they can continue to deliver to their customers.

"Digi-Key's focus is on consistency and continuity and providing the broadest selection of products and high levels of inventory - more than 10 million products globally, with more than 2.2 million in stock from over 800 quality name-brand manufacturers.

"Customers ordering online can count on their order to be picked, packed and shipped out in 20 minutes, arriving to them in just 48 hours to the UK and that's not going to change."

NT: Digi-Key is now offering online scheduling. What is it and why have you introduced this?

"Now available for our European customers, online scheduling provides customers the convenience to plan and place orders up to six months out in their local currency.

"While these are unprecedented times, we're working to monitor the situation with suppliers and getting regular updates."
Ian Wallace

"For contract manufacturers, OEMs and other customers seeking quantities above and beyond their normal engineering or prototype quantities, Digi-Key's new online scheduling helps to manage planning and deliveries. Online ordering helps customers to streamline project planning, take advantage of lower prices at higher price breaks, and secure future product stock in advance.

"To get started, they simply need to register online.

"We implemented online scheduling based on customer demand for it, and we encourage customers to continue sharing their feedback and insights so we can best support them now and in the future."

NT: What is the impact of the new Incoterms 2020 on distributors like Digi-Key - what implications/costs/benefits will customers see?

"At Digi-Key, the four Incoterms we currently use – DDP, CPT, FOB and FCA – have only minor changes and will not be noticeable in delivery service, and therefore shouldn't cause any disruption or issues for our customers."

NT: In terms of these business challenges is Digi-Key changing the way it operates?

"Digi-Key's business model and commitment to providing the broadest selection of products and high levels of inventory to support customers with what they need when they need it, combined with an online model and customer service, will not change because they all contribute to a reliable and consistent customer experience through challenging times.

"In fact, we're doubling down on this approach and continue to invest in our customers and in the future through new tools, support, adding more than 200 new suppliers and 300,000 new products, and building an expanded 2.2 million square foot Product Distribution Center that will provide even more power, automation and efficiency for our customers."

NT: Are there any specific challenges or issues, beyond Brexit, facing distributors operating in the UK?

"Brexit and COVID-19 have been the challenges recently in the UK and globally, but again, our Digi-Key business model puts customers first, ensuring we can be the reliable, dependable supply chain partners they need.

"There will always be challenges, and we will always continue to put our customers first and evolve our support and tools to deliver the products and service they know from Digi-Key."

Hearable devices collaboration

CEVA and Bragi have announced a strategic collaboration to drive a new class of hearable devices where the user experience is customisable via a hearable app store. Target devices include headsets, hearing aids, TWS earbuds and other smart audio devices for the consumer and the smart home.

The partnership takes advantage of CEVA's low power, CEVA-BX DSP architecture, along with its advanced LLVM compiler and Eclipse based development tool chain, and Bragi 4, a newly defined operating system (OS) designed specifically for hearables.

In conjunction with Bragi 4 OS, Bragi's commercial app store will enable technology partners and experts to offer software apps and services such as voice activation, voice biometric, audio post processing and music services. These software packages can be licensed and downloaded directly to devices, allowing individuals to personalise their hearables user experience.

CEVA will also offer a range of its value-added software via the Bragi app store, including ClearVox for noise reduction, WhisPro for speech recognition, MotionEngine for sensor fusion and the SenslinQ framework for contextual awareness.

"Imagine purchasing noise-cancelling software just before boarding a plane. Encrypt communication data for sensitive business conversations. Discover that you hear better with voice amplification through try-to-buy offers. On business travel, use your headphones to translate from Chinese into English. The possibilities are endless," said Nikolaj Hviid, founder and CEO of Bragi.

Through this collaboration, hearables and other smart audio devices will become flexible products capable of adapting their functionalities to their users through post-purchase apps and services.

"Our collaboration with Bragi brings a game-changing approach to the design of hearables and other audio devices, where the user experience can be adapted, instantaneously," said Moshe Sheier, VP of Marketing at CEVA.

Boost for next-generation EV batteries

UNIST RESEARCHERS DEVELOP NEW CATALYST THAT COULD BOOST MAB PERFORMANCE. **NEIL TYLER** REPORTS

A research team, affiliated with UNIST, has announced that a new catalyst could help boost MAB performance, in terms of discharge and charge efficiency.

Metal-Air Batteries (MABs) use oxygen from ambient air as recourses to store and convert energy and have received growing attention for their potential use in electric vehicles (EVs) owing to their large storage capacity, lightweight, and affordability.

The research team, led by Professor Guntae Kim in the School of Energy and Chemical Engineering at UNIST, has unveiled a new composite catalyst that efficiently enhances the charge-discharge performances when applied to MABs.

It comprises of a very thin layer of metal oxide films which are deposited on a surface of perovskite catalysts - the interface that's naturally formed between the two catalysts enhances the overall performance and stability of the new catalyst.

MABs, in which oxygen from the atmosphere reacts with metals to generate electricity, are one of the lightest and most compact types of batteries. They are equipped with anodes made up of pure metals (i.e. Lithium, Zinc, Magnesium, and Aluminum) and an air cathode that is connected to air. Due to their high theoretical energy density, MABs have been considered a strong candidate for next-generation electric vehicles.

MABs currently use rare and expensive metal catalysts for their air electrodes, such as platinum (Pt). They have proved too expensive for commercialisation so, as an alternative, perovskite catalysts that exhibit similar catalyic performance have been proposed, however there have been issues with low activation barriers.

Professor Kim has solved this issue with this new composite catalyst by combining two types of catalysts, each of which have shown excellent performance in charge and discharge reactions, according to the teams involved.

The metal catalyst (cobalt oxide), which performs well in charging, is deposited on a very thin layer on top of the manganese-based perovskite catalyst (LSM), which performs well in discharge. As a result, the synergistic effect of the two catalysts became optimal when the deposition process was repeated 20 times.

Infineon looks to address EV market

Infineon Technologies, which is expecting significant growth in automotive 48V systems, is expanding its portfolio of suitable power devices.

It is launching new packages for its 80V and 100V MOSFETs with OptiMOS 5 technology to meet the different requirements of various 48V applications.

The company has also set up a new manufacturing process at its Dresden facility in Germany.

Among the products being added to the company's existing portfolio is the addition of a third member to its TOLx family. The new TOLT package has been developed to enable heat dissipation through top-side cooling via the top of the package instead of via the PCB, allowing for an increase in power of more than 20 percent while reducing the cooling effort on the board.

Infineon is also expanding the package portfolio addressing less power-hungry auxiliaries such as fans and pumps that are also increasingly being transferred to the 48 V supply, with new versions in the small S3O8 package (3.3 mm x 3.3 mm) for lower currents up to 40A.

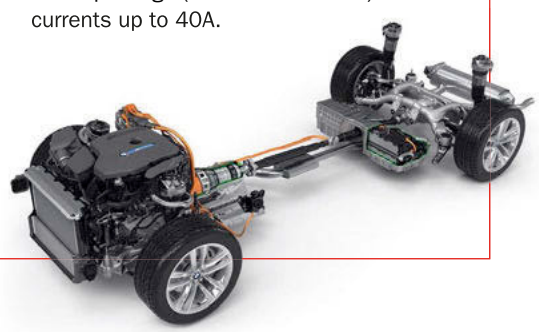

HPE unveils edge and core products

HPE'S NEW PORTFOLIO OF EDGE AND CORE PRODUCTS LOOKS TO SPEED UP THE ROLL-OUT OF 5G IN THE UK. **ELLIOT MULLEY-GOODBARNE** REPORTS

While 5G providers batted off questions about airwaves distributing Covid-19, earlier this month HPE announced its edge and core products for networks to use in the second half of this year.

The portfolio is aimed to speed up the roll out of 5G services outside the mobile model that is well established in the UK on a pay-as-you-go consumption model.

Products are split between network and enterprise customers with the former being afforded the capability to compute data in a cloud-native 5G core on HPE or non HPE infrastructure, as well as virtual RAN capabilities and multi access edge computing (MEC) for processing requests closer to the end user.

"As the operators move to a standalone 5G core, the ones that are going to be successful are the ones that exploit that technology to its fullest extent," said Martin Halstead, global chief technologist, telco servers, HPE, "and network slicing gives operators the ability to differentiate their services in a more granular way than they do today"

"If you have a factory environment that requires tens of thousands of data points gathering information, but on an infrequent basis, you need to ensure that you can support that number of devices and, when those devices finally wake up, send what they have to some central repository.

"That's different to a manufacturing plant in Germany making Mercedes Benz that has a bunch of extremely low latency tolerance robots that are constantly on and need real time transactions. Those are two enterprises cases, but absolute polar opposites of each other but the operator would be able to prioritise the service offering that they have in such a granular way that they can differentiate them."

For the enterprise, HPE is offering the capability to manage the connectivity and bandwidth available for Wi-Fi, SD-WAN, SD-Branch, Video and IoT devices from a centralised platform as well as deploy a network that seamlessly passes between Wi-Fi 6 and 5G depending on connection strength without any user interactions or permissions.

Named 'AirSlice' and 'AirPass' respectively, Chris Dando, chief technologist for communications and media at HPE said that the manipulation of the airwaves could lead to more effective distribution of 5G capacity.

"If we took the city of the City of London for example, you are able to predict how much RAN usage is needed during office hours. Outside office hours, the venue usage will be much lower and if you're thinking about that scenario, as an operator, at different times I might want to offer different types of services and utilise some of the capacity for a different function in the evenings."

Dando went on to say that both enterprise offerings could lead to better connectivity on the whole adding that mass gathering areas such as universities and stadia, due to their strain on bandwidth, as well as office buildings and supermarkets, due to their almost-impenetrable walls, could stand to win.

"Statistics show that the vast majority of mobile device usage is when you're static inside a building, but you're not always in the same building. The AirPass product is good for those people who are traveling, go into new places and want to have those sorts of capabilities.

"But cellular coverage is fundamental for all the use cases that we see, which is where AirSlice comes in. Anything associated with smart cities, anything associated with vehicle-to-everything has to work when the devices and sensors are not on a WiFi network because they can be mission critical."

iaremenko/stock.adobe.com

UnitedSiC announces global distribution partnership with Digi-Key

UnitedSiC, a manufacturer of silicon carbide (SiC) power semiconductors, has announced a global distribution agreement with Digi-Key Electronics.

The partnership will provide Digi-Key customers with worldwide, 24-hour availability of UnitedSiC's Silicon Carbide product portfolio - including the only standard gate drive SiC devices currently in the market.

Yalcin Bulut, VP of Global Sales and Marketing at UnitedSiC, said: "This partnership focuses on expanding the UnitedSiC product line to an even wider group of power designers by leveraging Digi-Key's distribution expertise. We will now be able to provide our SiC wide bandgap technology to the markets and customers served by Digi-Key."

The UnitedSiC products available through Digi-Key will be beneficial to engineers focused on electric vehicles, battery charging, IT infrastructure, renewable energy and circuit protection.

David Stein, VP of Global Supplier Management at Digi-Key said: "We are excited to partner with UnitedSiC and bring on their portfolio of silicon carbide semiconductor devices. With ever increasing pressure on power engineers to deliver efficiency and cost-effectiveness, it's critical we work with companies who have market leading technology. We look forward to introducing UnitedSiC's portfolio to our global engineering community."

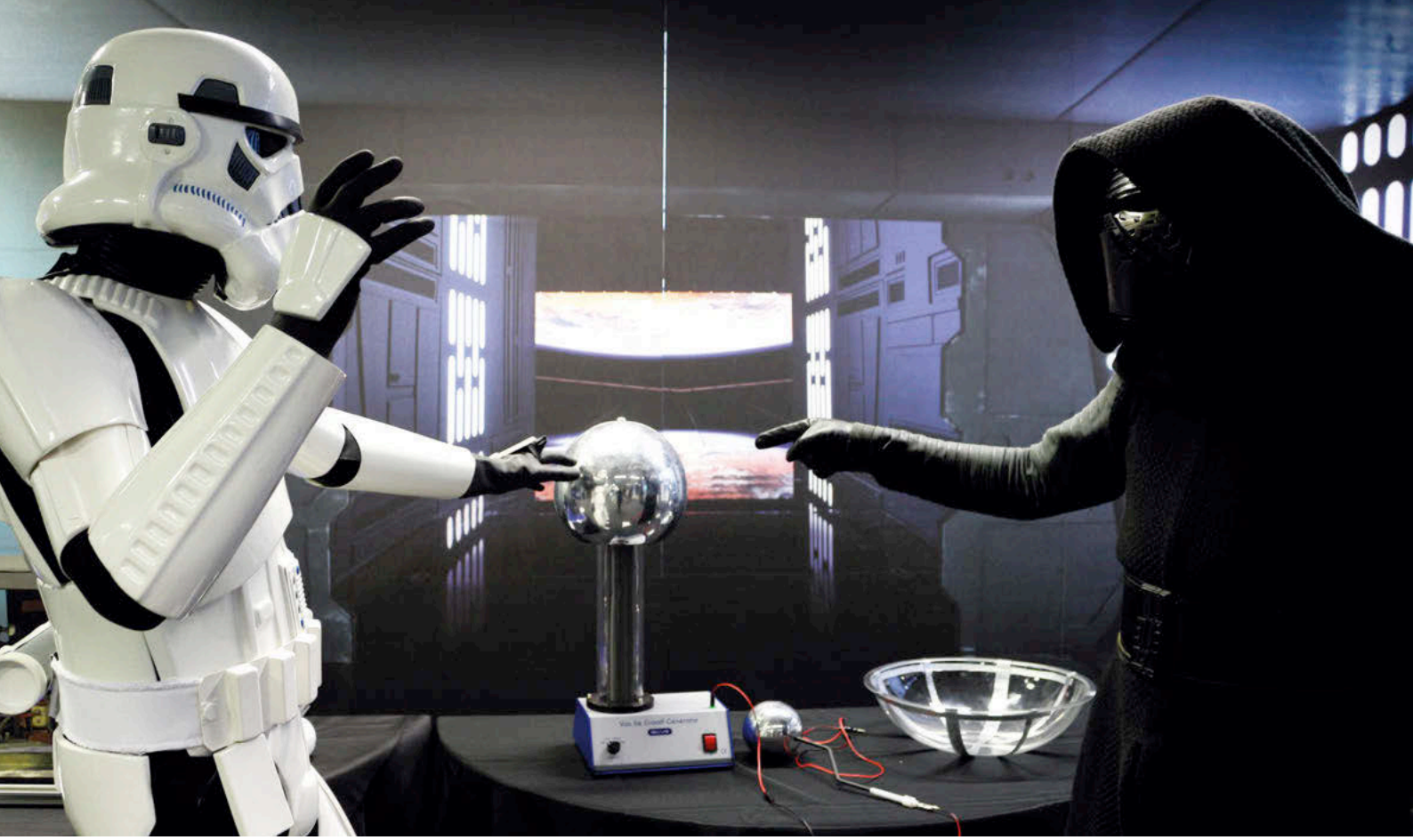

PREDICTING THE FUTURE

Do films play a role in influencing science and research? By **Neil Tyler**

"For me science fiction is a way of thinking, a way of logic that bypasses a lot of nonsense. It allows people to look directly at important subjects," so said Gene Roddenberry, the creator of Star Trek.

While we are not looking at the societal impact of science fiction in this article, science fiction has been used to look at and explore imagined or actual science and in many cases has predicted technologies that we now use.

Renowned authors such as Jules Verne, H.G. Wells, and Isaac Asimov described and predicted various technologies that have, over time, become a reality.

In the 1953 novel Fahrenheit 451, Ray Bradbury talked about "seashells" and "thimble radios", devices that resemble earbuds and headsets with Bluetooth capability. Fast forward 60 years, and millions around the world use Apple's wireless AirPods and hundreds of other similar devices.

In his novel, Bradbury even described a digital wall through which people could communicate with one anther – for many, what he described is strikingly similar to the way in which we share messages and information on platforms like Facebook.

The advent of film has built on those achievements and since the 1920s has inspired scientists and technologists to turn, what at first appears to be wild fantasy, into reality.

For many, the science fantasy of films has had a way of entering real life and has predicted some of the biggest scientific breakthroughs of recent years.

Whether it's the way we communicate with one another, or travel, manufacture devices, treat illnesses or enjoy different forms of entertainment, many of the innovations that we take for granted first appeared in some form on the big screen.

Many of the writers or screenwriters behind filmed science fiction will have had some level of scientific knowledge, or interest, and will have looked to ensure that even the most surreal, or unbelievable, technologies have contained some element of truth based on actual scientific fact.

Others will rely on a stand-in for magic, but even then, as technology has evolved, magic has in some cases becomes a reality.

Crucially a lot of the technology we see on screen is termed as being 'cool'. How many ideas or concepts were first seen on screen and were thought of as being cool and then, with the help of enough knowledge and money, made a reality?

Star Trek has been a source of much of this predicted technology.

Flip top communicators were made famous by the TV show, and with the arrival of Star Trek: The Motion Picture in 1979, Captain Kirk and his crew were seen using a wrist version of those famous handheld

Above: Films like Star Wars have done much to inspire new technologies

moviestillsdb/alamy.com

communicators – hello Apple Watch, Samsung Gear, and a host of other similar devices that are now used in 'everyday' life.

Films throughout the past 50 years have identified a host of technologies that are now used widely, or are on the cusp of mass acceptance.

In Total Recall, Arnold Schwarzenegger's character Douglas Quaid summons what is called a 'Johnny Cab', which then offers to drive him wherever he wants to go. Today, we have Uber and similar companies and in a matter of a few years we'll be seeing autonomous taxis on our roads.

The concept of the automated taxi service, seen as science fiction just 30 years ago, is fast becoming a reality and automotive companies are already looking to transform their business models to address these new forms of transportation.

Other films that used or presented technologies that are now commonplace include 2001: A Space Odyssey in which video calls, tablets and artificial intelligence, in the form of the ship's control system HAL, were first shown by Stanley Kubrick in this seminal work.

What's interesting about HAL is the way in which the crew are seen interacting with the system, as it is how we interact with Siri, Google Assistant, Alexa and Cortana today.

The film Minority Report showed off different types of technology including retinal scanners, touch/gesture-based UI, and targeted advertising, all of which made appearances in the film and are widely used today.

A version of the suit first used by the character Iron Man and which has appeared throughout the Marvel film franchise, since its first appearance over ten years ago, is now being developed by the US military.

These high-tech suits, intended to mirror some of Iron Man's capabilities, form part of the military's TALOS program – short for Tactical Assault Light Operator Suit – which aims to enhance human combat by processing data from drones, naval sensors, and reconnaissance aircraft to better inform soldiers.

Inspirational films

Films like these, along with Back to the Future and Star Wars, have done much to inspire new technologies.

According to Professor Carsten P. Welsch, Head of Communications for the Cockcroft Institute and Head of Physics at the University of Liverpool, "Films like Star Wars and Back to the Future have certainly inspired me. Today I'm watching Picard on Amazon Prime.

"A lot of the technology we see on the cinema screen, and that appeared beyond our reach, was based on scientific principles. Throughout the production of Star Wars scientific advisors were employed to ensure that what we saw could quite possibly be linked to current technologies and could, in time, become fact.

"The science fantasy associated with these films has predicted some of the biggest scientific breakthroughs of recent years."

According to Professor Welsch some of those technologies include:

"Matter and antimatter can be seen as resembling the light and dark side of the Force." Prof. Carsten Welsch

Minority Report showed technology such as retinal scanners and gesture based user interfaces

proton torpedoes which were used to destroy the Death Star by Luke Skywalker in probably the most iconic scene in the very first Star Wars film; light-sabres, as used by the Jedi; hovering land speeders as seen in the first Star Wars film or the speeder bikes used by Luke and Princess Leia as they flee storm troopers in Return of the Jedi.

"All of these were science fiction but based on science and are now a reality in many different spheres of life," explained the professor.

"While proton torpedoes are not being used to 'blow up' Death Stars they are being used in hospitals to target cancer cells hidden deep inside the body."

This type of proton therapy is currently being used in the Christie Hospital in Manchester.

"It uses the same principles to guide protons to a specific cancer, avoiding healthy tissue, and then releases the energy of the proton to destroy the cancer. It's a treatment that's being used to tackle deep-seated cancers, such as prostrate or brain cancer, which have defined volumes and which, through diagnostics, can be more easily located.

"Typically, treatments are spread over a few days. The patient will require 10-20 treatments and that will be conducted in a clinical environment. Each treatment is no longer than what it would take for an x-ray and there are no immediate side effects. By comparison, it is much less traumatic than other existing types of cancer treatment."

While there are plans to roll this service out across the NHS, the technology still requires a daily quality assurance process and the use of sensors to ensure that the right dose is always delivered and the machine

correctly calibrated.

"Tumours in a moving organ provide a big challenge and you need to be able to track its location during treatment. You need to be able to follow the motion of the patient as they breathe, but that's something online diagnostics and controls will be able to deliver in time, enhancing the treatment that's available," according to Prof Welsch.

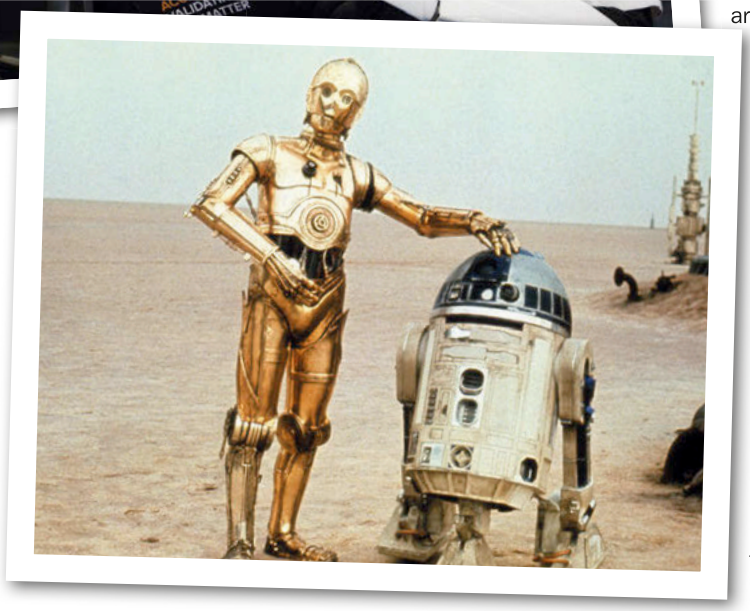

The droids from Star Wars. Today machines and robots are everywhere

Droids, carbonite and The Force

"Two of the most iconic characters in the Star Wars films are R2-D2 and CP30. These droids may have performed a 'Laurel and Hardy' double act but today we live in a world where AI-enabled machines and robots, home voice recognition devices and driverless cars are a reality.

"They are all around us and drones are already being widely used for things like agriculture and warfare."

There are many concepts that first appeared in Star Wars and on which scientists around the world are working, according to Professor Welsch.

"Although the light sabres that were used in the films wouldn't be possible, according to the laws of physics, there are many exciting applications that are already real, such as laser knives for high precision surgery that can be controlled by robot arms.

"If we look at the concept of Industry 4.0 we can see adaptive manufacturing using lasers for creating complex structures in metals.

"We also use lasers to realise extremely high electric fields and build particle accelerators that are up to 1,000 times smaller than current technology. This has huge potential to enable entirely new fundamental research and applications that will benefit society."

In another famous scene from Empire Strikes Back, Han Solo is frozen in carbonite then brought back to life after being captured by Darth Vader and Boba Fett.

"Today, very cold temperatures, close to absolute zero, are used to create a vacuum pressure in a particle accelerator that is better than outer space. These cryogenic temperatures also enable new sensor techniques that are more sensitive than any other technique," Prof. Welsch explains.

Turning to the Force, which was used in the films to move objects - the Jedi (the light side) and Sith (the dark side) employed the Force in a manner similar to telekinesis to hold and move things with their minds. "Matter and antimatter can be seen as resembling the light and dark side and give us unique insight into the fundamental laws of nature," according to the professor.

"Antimatter is used in Jedi interceptor hyperdrive rings to provide a starship with enough density to remain in hyperspace, as the interceptor is not large enough to retain supralight speeds without external aid.

"A new facility based at CERN, the Extra Low Energy Antiproton ring (ELENA) is the first and only facility in the world to store and deliver cooled antiproton beams at low energy and researchers, from the Cockcroft Institute, are now taking a closer look at these mysterious particles to try and understand why it is that all matter in the universe created after the Big Bang is not accompanied by an equal amount of antimatter, or particles with an opposite charge."

As Professor Welsch explains, "Our detectors provide us with a much better insight into low energy antimatter beams, so that we are able to understand and control them better and carry out experiments which would have previously been impossible.

"Such experiments have the potential to rewrite our assumptions about nature and the properties of space and time, making it one of the most exciting fields of research out there.

"Usually we study how to accelerate sub-microscopic particles, but it is definitely an interesting question whether antimatter or high power lasers could be used for spacecraft propulsion.

"If we can find ways how to create and store large amounts of antimatter, then entirely new applications could become possible."

With plenty more science fiction blockbusters hitting the big screen, should scientists be taking a closer look at film if they want to get a glimpse of the future?

Complying with the latest standards

How diagnostic data and operations are equipping Flash memory ICs for the demands of the automotive safety standard. By **Anil Gupta**

NOR Flash has been a dependable technology in vehicles for many years and is used in various automotive systems. In these applications, this non-volatile memory provides storage capacity for application code, offering reliable operation and Read speed fast enough to support Execute-in-Place (XiP), in which a host processor runs code directly from Flash, bypassing external DRAM.

NOR Flash is also playing an important role in emerging implementations of the ADAS (Advanced Driver Assistance Systems) concept and in the next few years more of a vehicle's activity will be controlled by electronics systems containing Flash.

Flash is a component in systems which are safety-critical - any uncontrolled failure would have the potential to render the vehicle unsafe or uncontrollable.

To manage and minimise the risk of systems failing to operate as specified, the automotive industry has implemented the ISO 26262 Functional Safety standard, and as a result automotive systems OEMs are looking for a new breed of Flash ICs which can better support the requirements of functional safety design at the system level better.

These features are likely to be seen both in serial NOR Flash – the Flash memory type most often used in embedded systems for boot code storage – and in Single Level Cell (SLC) NAND Flash.

Serial NAND is a valid alternative to NOR Flash for code storage in applications that do not require a very high number of Program/Erase cycles, and that do not need to implement XiPand it is lower cost – a NAND Flash bit cell is four times smaller than that of a NOR Flash cell. Offering much shorter Write-times than NOR Flash, NAND Flash is a valuable technology in systems that perform Over-The-Air (OTA) software updates. With an on-board Error Correcting Code (ECC) engine and supporting high-speed continuous/sequential Read capability across page and block boundaries, serial NAND is now being considered by designers of automotive functional safety applications alongside NOR Flash.

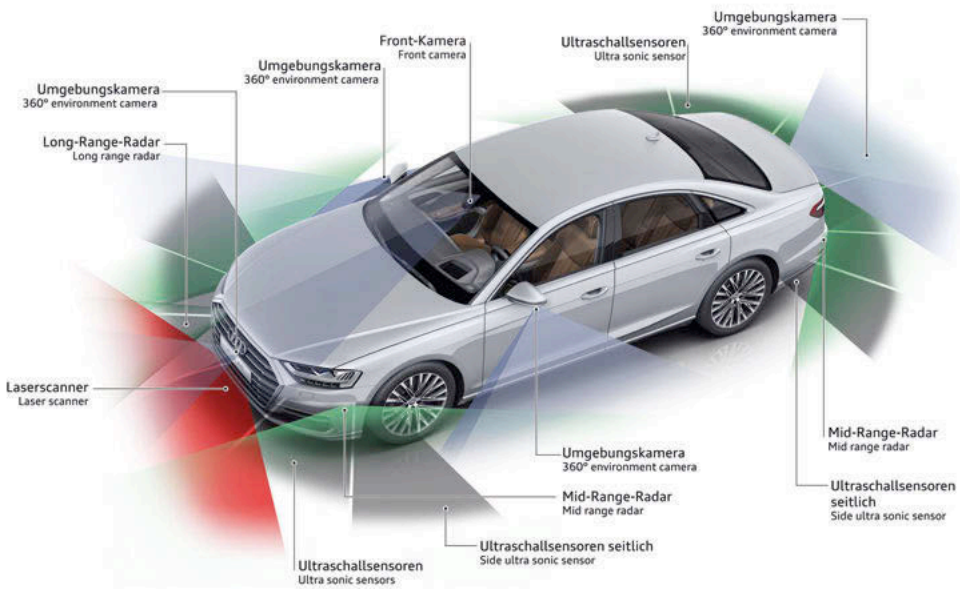

Figure 1: The Audi pre sense 360° safety system detects collision hazards all around the car and initiates specific preventive measures. (Image credit: Audi)

Exposing diagnostic data to view

NOR Flash memory technology is very reliable, and a device's operating lifetime is highly predictable. NOR Flash ICs have proved their qualities in the field, and automotive OEMs' preference for the technology is based on experience.

For perspective, the ISO 26262 standard specifies reliability and other parameters in four 'ASIL' grades (Automotive Safety Integrity Level). The most stringent grade, ASIL-D sets a maximum system-level failure rate of <10 FIT (Failure In Time) – a measure of the failure rate per billion device-hours. At the level of individual components such as a NOR Flash IC, this calls for a maximum failure rate of far below 10 FIT.

Nevertheless, automotive manufacturers' ISO 26262 compliance efforts call for a way to identify any fault that could theoretically still occur in a NOR Flash IC.

In the past, NOR Flash ICs were supplied to automotive OEMs as a memory 'black box'. Functions which maintained data integrity and data retention were, in conventional devices, inaccessible to the user. This closed operation is in conflict with the principles of functional safety, which require the host system to monitor component parts for faults, or for irregular behaviour that indicates a fault is likely to occur, and to implement counter-measures aimed at maintaining proper functioning.

This means that NOR Flash ICs

intended for use in ISO 26262 compliant systems must make diagnostic data available to the host controller, and provide ways in which the host can modify the IC's operation. Two main features of a NOR Flash IC provides:

1. An ECC engine, which maintains data integrity by detecting and correcting bit errors in Read operations
2. A User Mode which enables periodic testing of the ECC engine's operation.

In conventional NOR Flash ICs, the ECC engine operates in the background, detecting and correcting bit errors, without alerting the host controller.

ECC data may be used to facilitate functional safety compliance in various ways, as it is capable of correcting single-bit errors (when there is only a single-bit variance between the main data bit and the parity bits); and of detecting (but not correcting) double-bit errors.

By providing a status register to the host controller, a NOR Flash device can indicate whether the most recent Read operation had one of three possible outcomes:

- good data with no error correction required
- good data after error correction
- bad data that were not able to be corrected

This 'after the fact' information can be used to help maintain long-term data integrity, but ISO 26262 requires automotive systems to detect faults when they occur, and to deploy counter-measures immediately.

	ASIL-A	ASIL-B	ASIL-C	ASIL-D
SPF (Single Point fault) Metric	Not Applicable	> 90%	> 97%	> 99%
LF (Latent Fault) Metric	Not Applicable	> 60%	> 80%	> 90%
Failure rate	10^{-6}/hour	10^{-7}/hour	10^{-7}/hour	10^{-8}/hour
FIT (failure in time)	< 1,000 FIT	< 100 FIT	< 100FIT	< 10 FIT

Figure 2: Minimum detection rates for single-point and latent faults, and maximum failure rates as specified by the ISO 26262 standard

In new automotive NOR Flash ICs, real-time error information may be provided via a dedicated Error pin. This pin may be asserted to indicate the exact location of un-correctable data. There is also an option for the user to select whether the Error pin will indicate corrected single-bit errors, or detected and un-correctable double-bit errors.

The host may then use the information from the status register, from the Error pin, or from both, to build an error register – effectively a 'map' of the NOR Flash array, logging the locations of bit errors.

The host may then set a threshold, so that when the number of errors occurring at any one location, such as a particular block, exceeds the threshold, that location is 'retired' from the memory.

Latent failure

So far, the measures described are concerned with the handling of single-point faults, for which the ISO 26262 standard specifies minimum detection rates for each ASIL grade. But the standard also requires automotive systems to detect 'latent faults', that is a fault which does not violate functional safety requirements on its own, but which can violate them in conjunction with a second fault.

In a NOR Flash IC, there is potential for such a latent fault – a malfunctioning ECC engine is an example. In normal operation, NOR Flash technology is reliable and rarely requires error correction. So as long as an ECC engine failure does not cause it to wrongly correct good bits, the failure would normally go unnoticed. But when a single bad bit goes uncorrected because of the failed ECC engine (a latent fault), the two faults in combination pose a risk to functional safety.

To enable detection of a latent ECC engine fault, in Winbond's automotive NOR Flash ICs it is possible to provide special User Mode and ECC Encoder Read commands, enabling the user to inject a main data pattern into the memory, and to read back from the ECC engine the main data and the parity data that it generates. If the parity data are incorrect, the ECC engine can be flagged as faulty.

Likewise, the User Mode may be used to check ECC decode operation. In User Mode, the user loads main data and parity data into the ECC engine, and with a special ECC Decoder Read command the main data may be read back. Single-bit and double-bit errors may be introduced into the main data and parity data to check whether the ECC engine performs single-bit error correction and double-bit error detection properly.

In response to demand from manufacturers of ADAS products and other automotive systems, Winbond is integrating functional safety into a family of automotive NOR Flash products available later this year.

By providing both SPI NOR and Serial NAND solutions for functional safety applications, Winbond is able to offer the user the freedom to select the appropriate Flash memory type for the requirements of their design.

Author details:
Anil Gupta is Technical Executive, Winbond

ECC Status		Descriptions
ECC-1	ECC-0	
0	0	Entire data output is **successful**, without any ECC correction.
0	1	Entire data output is **successful**, with 1~4 bit/page ECC corrections in either a single page or multiple pages.
1	0	Entire data output contains **more than 4 bits errors only in a single page which cannot be repaired by ECC**. In the Continuous Read Mode, an additional command can be used to read out the Page Address (PA) which had the errors.
1	1	Entire data output contains **more than 4 bits errors/page in multiple pages**. In the Continuous Read Mode, the additional command can only provide the last Page Address (PA) that had failures, the user cannot obtain the PAs for other failure pages. **Data is not suitable to use.**

Figure 3: The error log in Winbond Serial NAND helps identify potential weak cells or blocks

Amass DC power connectors

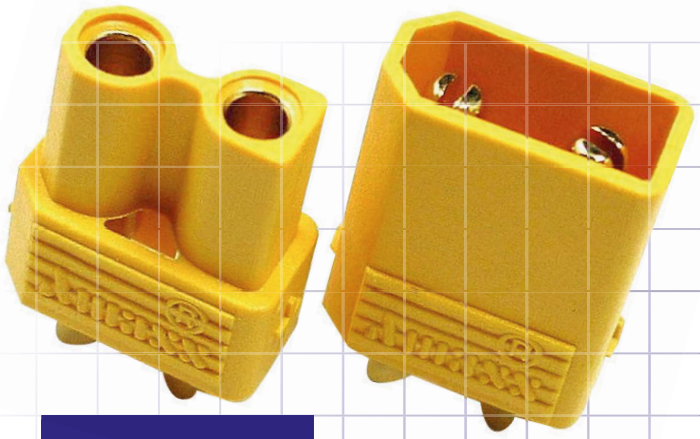

1. XT30 connector

Some electronic components are well known to even complete rookies, not to mention electronic engineers or technicians. They are so common that at some point we stop paying attention to them, even though we have never even thought of finding out the name of their manufacturer. A very good example of such products are the well-known XT30, XT60 or XT90 power connectors (plugs and sockets). Do you know the name of their manufacturer?

Amass has a wide portfolio of high-current connectors and accessories which are compatible with various types of batteries. The fact that the company's headquarters are located in the same area where many Li-Ion and Li-Po battery manufacturers are seated is no doubt an asset here. During 18 years of its operation, Amass has become one of the leading manufacturers of connectors. The company's current portfolio includes more than 300 types of connectors: test connectors (measuring and test clips), banana connectors, panel-mounted automotive connectors and many others. Thanks to a significant increase in the use of lithium batteries, these XT type connectors used in numerous devices (including toys), offered by Amass in various versions, are particularly popular. The company's products are exported to 63 countries and applied in products of companies such as Qinghua, Ponovo, Fluke, Mac Tool and others. You can find them virtually everywhere.

2. MR30 connector

Battery connectors

The demand for rechargeable equipment has been growing in recent years. They require batteries with different voltages, capacities and drain rate. Problems related to their use increase with the current, because the voltage drop at the point of contact leads to the loss of power. This is important not only because of energy loss, but also due to the fact that the connector may overheat. The durability and stability of connection between the power source and the load is also very important for this type of connectors. Therefore, in many cases, typical DC connectors will not prove effective and may even cause damage to the device in which they are used. An example of such an application are multi-rotor drones, designed for various tasks – aerial filming, taking photographs and monitoring activities with the help of various sensors.

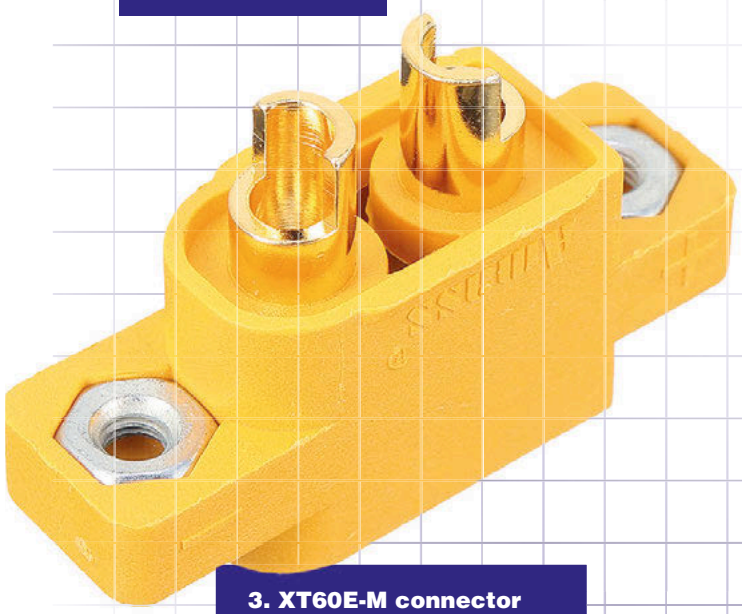

3. XT60E-M connector

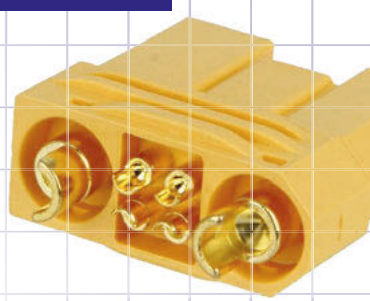

4. XT30G-F connector

5. ICX301 connector

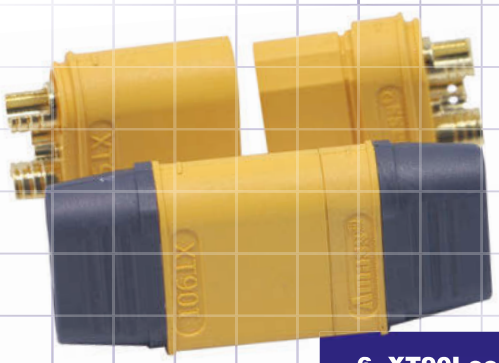

6. XT90I connector

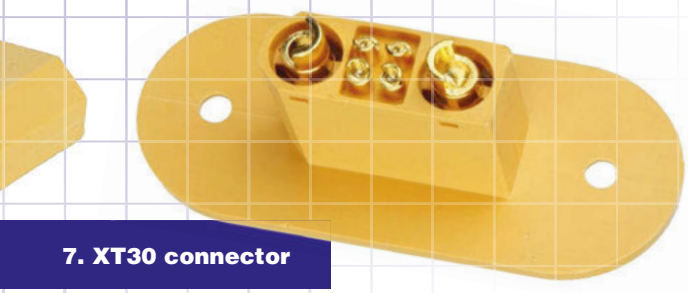

7. XT30 connector

The range of connectors offered by Amass is exceptionally wide and it allows you to select the right product for each battery pack or power supply battery. Interestingly, even the smallest connectors, type XT30 (picture 1) or MR30 (picture 2), can be used in applications requiring continuous 15A current, while the "AS" series supports up to 90A! The high quality of the materials used and the stable production technology ensure that the final product meets even the highest requirements. With the exception of the so-called "banana" connectors, all of them are polarized and feature a clear "+" and "-" marking on the housing.

Minimal losses and optimum operating temperature

Amass connectors are developed with special care. The manufacturer pays attention to the appropriate selection of materials – not only those that are directly conductive, but also the connector housing, so that, within the permissible range of temperature exposure during soldering, the contacts do not melt from the housing, deform or oxidize. Contact surfaces are coated with a layer of gold, which gives the XT30 connector a resistance of only 0.70 mΩ, while in the case of XT90 it's as low as 0.30 mΩ!

The offer includes a number of connector mounting options. These include sockets and plugs designed to be soldered into the board, mounted on the cable or on the device panel (e.g. XT60E-M connector shown in picture 3 and XT30G-F connector in picture 4).

Lithium battery connectors

Amass pays special attention to the very dynamic battery market. Here, very good quality, appropriate parameters and – more and more often - specialist workmanship are required. For example, connectors to the battery pack should often have additional monitoring contacts. Such solutions are available in the Amass product portfolio, e.g. ICX301 and XT90I connectors (pictures 5 and 6).

It is worth mentioning that all contacts of Amass connectors are gold-plated. The only exception is the AS250 type.

Additional information on Amass connectors is available at https://www.tme.eu/pl/katalog/p,amass_1260/

SURFING THE **MMWAVE**

How are mmWave frequencies helping to solve today's network challenges? **Keith Benson** explains

Industries often benefit from technology created for a different industry's application and we see this happening with 5G telecommunications trying to realise the benefits the defence industry created with phased array antennas.

Similarly, satellite communications are undergoing a shift in technology by moving away from geosynchronous equatorial orbit (GEO) or geostationary satellites and exploring low Earth orbit (LEO) satellites offering higher data throughput with better coverage. This idea moves from a few GEO satellites to potentially thousands for a given network.

As mobile communications have proliferated so the demand for higher data rates has soared.

Every few years, new standards look to increase data throughput which are often correlated to more sophisticated modulation schemes, which can simultaneously transfer multiple pieces of information.

As the modulation schemes become more sophisticated, the ability to transfer more data grows. However, there comes a point where additional increases in modulation complexity do not offer a significant improvement in throughput. One way to modulate a signal is to spread it over a range of frequencies around a carrier frequency and this ability to transmit more data simultaneously by moving to higher frequencies is pushing applications toward mmWave frequencies.

Radar technology has been under continual development over many years. As a result, radar is used in daily weather reports, air traffic control, and emerging applications such as in the automotive industry, where radar is used to sense the distance between a car and an object.

Traditional low frequency radar systems in UHF and VHF frequencies have been used as early detection radar over very long distances. Fast moving aircraft more often operate at X-band frequencies (8 GHz to 12 GHz) that benefit from a higher resolution and smaller antennas and there is increased development happening at 94 GHz for guided munitions and missiles.

There are several benefits in moving to higher frequencies for radar systems and we can see the benefits by looking at the range resolution and angular resolution that help to characterise the ability to resolve an object.

The first benefit of moving to higher frequencies is that the size of the antenna shrinks to obtain a given angular resolution, which is the key to fitting into a small munition. Another way to view it is that the angular resolution increases at higher frequencies for a given antenna size. The range resolution of the radar is proportional to the modulation bandwidth and, as previously discussed, improves at higher frequencies.

Traditionally, electronic warfare systems have operated between 2 GHz to 18 GHz, which covers S-, C-, X-, and Ku-band radars. As the range of threats increases, so will the electronics to listen for them, and ultimately counteract them.

We can see that 5G equipment operating at 28 GHz and 39 GHz, is close to the existing Ka-band frequencies used for missile guidance. As a result, new requirements for electronic warfare systems will extend to cover the 5G frequencies ranging from 24 GHz to 44 GHz, and there will be many more electronics available at these frequencies for militaries to consider as well as the need to address wider frequency bands of operation.

A key technology used in defence applications has now become desirable for 5G telecommunications.

The phased array antenna technology is desirable for 5G because of its ability to transmit multiple data streams or radiation patterns. In defence applications, this could allow a fighter jet to track multiple targets, while in 5G telecommunications, it makes it possible to transmit data to multiple users at one time.

Defence applications also desire a beam where the energy is targeted in one direction, providing a low probability of intercept or jamming. For telecommunications that makes it possible to consume less power as you are able to efficiently target the information to the user.

Both applications benefit from the ability to reposition the beam almost instantly and there are many additional benefits that both the telecommunications and defence industries will appreciate that make this technology attractive.

The 5G effect on ICs

Today, the advanced technology supporting this 5G cellular infrastructure represents a significant growth area for many telecommunications equipment providers and their IC-based supply chain.

This significant growth opportunity has spawned millions, and perhaps billions, of dollars of investment to realise next-generation products. The core components that make up these systems are the

Figure 1: 5G IC supply chain

ICs that route the data through the networks.

We can see that each aspect of the IC supply chain is adapting and evolving. Starting with the foundry processes available to the final test solutions of those products, there has been significant innovation in the technology supporting these products.

The foundries that offer wafer fabrication services create the base material for the ICs and continue to innovate. Many have developed new process technology to compete and enable this new 5G technology.

One example of such an improvement could be a move to more cost-effective optical lithography compared to electron beam lithography. Another benefit could be integrating new functionality into one process node to compete in this price-sensitive market.

The IC design evolves as new process technology becomes available. With new functionality available in one process node, the IC designer is able to combine certain features into one product or extract a higher level of performance from the core transistors than was previously possible.

These trends ultimately lead to chips that are more integrated and more easily deployed.

Also attractive, as we expand to mmWave frequencies, is the ability to take advantage of low cost packaging, which enables easier assembly. Traditional defence assemblies at mmWave frequencies have been a chip-and-wire assembly, which translates to a small metal housing where chips are wire bonded to each other. This is not a high volume method of assembly and is often more expensive than surface mount assembly techniques. The main motivation for this in past years has been size constraints. However, increased integration into smaller packages with increased performance makes surface-mount assembly much more attractive.

Test solutions such as the over-the-air test have become a reality for phased array antennae and their ICs at 28 GHz and 39 GHz. Previously, to be able to test a phased array antenna, you would often need an anechoic chamber that is large, difficult to construct, expensive, etc. Now these test solutions are becoming much more affordable, smaller, and available off the shelf, which greatly expands the number of vendors that can offer a full antenna solution without a significant investment to measure the final product.

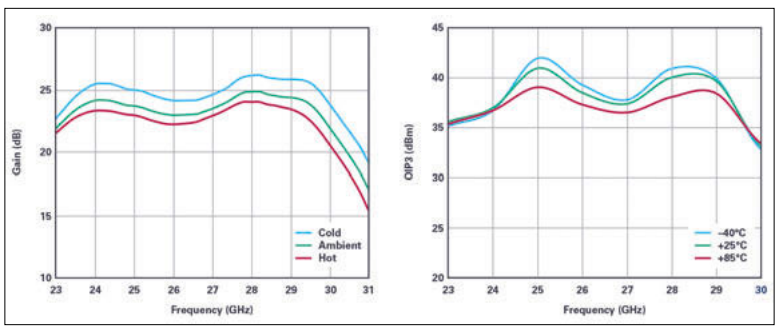

Figure 2: HMC863A measured gain (left) and OIP3 (right) vs. temperature

Phased array antennas have migrated from a technology that mainly defence companies and universities could explore to one that is becoming mainstream.

Not only does it allow for the telecommunication companies targeting 5G opportunities to take advantage of this new technology, but to better defend against emerging defence threats as well. It is likely that previous challenges for less experienced antenna engineers can now be resolved much more quickly with accurate measurement techniques that are available off the shelf from standard instrumentation vendors.

The result is many more mmWave products available in the industry that can be deployed in communications, as well as in defence applications. Very often the products that are used for cellular infrastructure are close in specification and function to what is required for the defence and instrumentation industry.

It's this growth of readily available ICs and test solutions, enabling a fast time to a final product, that is significantly de-escalating the level of threats in the mmWave frequencies for the defence industry.

Analog Devices has invested significantly in developing solutions for 5G telecommunications in addition to the instrumentation and defence industry that will be impacted. The products for the telecommunications market tend to be narrower frequency bands where performance can be optimised more easily.

The defence industry often desires a wide bandwidth solution as there are multiple frequencies from which a threat can originate without advanced knowledge.

One example of a power amplifier (PA) used in 28 GHz 5G telecommunications infrastructure is the HMC863ALC4, covering 24 GHz to 29.5 GHz and supplying greater than 0.5 W of RF power. In addition, the company has developed solutions for the defence and instrumentation market, such as the ADPA7005, covering 20 GHz to 44 GHz.

The ADPA7005 supports over an octave of operational bandwidth and provides a saturated output power of greater than 1W over the band of operation. A consistent gain of nominally 15 dB across frequency allows for easy integration into a complete system. Additionally, the high TOI of over 40 dBm is ideal for measuring or generating highly modulated input signals.

The advancements in telecommunications networks have generated a reaction in peripheral industries that will unfold over the coming years.

At the centre of this migration will be the need for more information in the form of data that is likely to create new weapons that will never physically strike an object.

The applications in today's world are moving higher in frequency and it is only beginning.

Author details:
Keith Benson, Director, Amplifier Products, Analog Devices

Ways to play it cool, when the heat is on

With increased densities in constrained spaces, addressing thermal issues is becoming harder. **Alex Brinkley** looks at some innovative devices that keep their cool

Small is the desirable form factor, whether it is consumer devices or industrial equipment. As space becomes more limited on circuit boards or in automotive systems, it pays to be small. Miniaturisation places demands on circuit boards and other system space, as densely packed components vie not just for real estate but for the right operating conditions as heat levels rise.

Materials and packaging are increasingly important in the design of devices for power supplies, power converters, RF amplifiers, synthesisers, switch mode power supplies (SMPS), diodes and filters.

Vishay Thin Film uses aluminum nitride substrates in both tin / lead (SnPb) and lead (Pb)-free wraparound termination styles for its ThermaWick Thermal Jumper surface mount chips. They provide an electrically isolated thermal, conductive path to a ground plane, chassis or heat sink while maintaining electrical isolation and have a low capacitance that makes them particularly suited to high-frequency and thermal ladder applications, says the company.

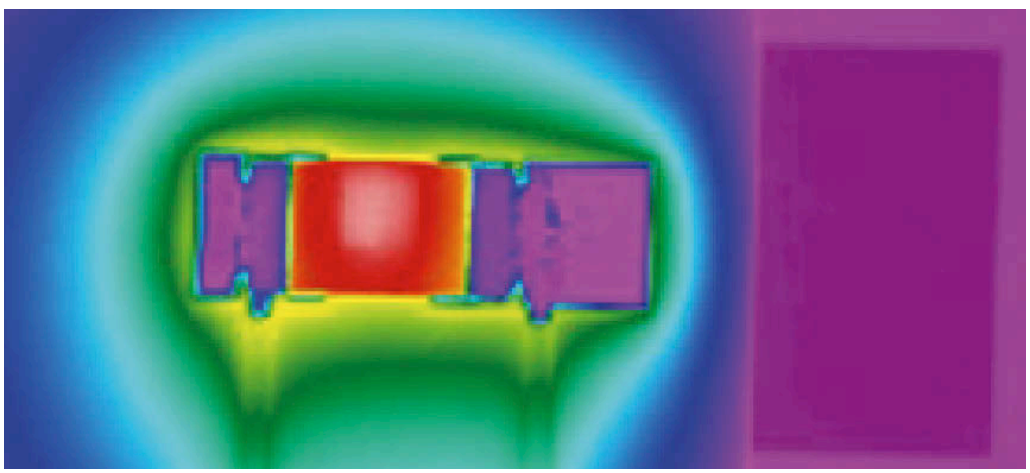

Figure 1: Vishay's ThermaWick THJP1206 thermal jumper reduces surface temperature by 36%

Thermal conductivity

In designs where components generate heat but cannot be grounded, the surface mount chips can be used to remove that heat to protect the circuit and improve the reliability of the end product. They have a high thermal conductivity AlN substrate, delivering 170W/m°K and have electrically isolated terminations and low capacitance to increase the power handling capabilities or extend the operating lifetime of associated components.

In a dramatic illustration, the company shows how the ThermaWick THJP1206 thermal jumper reduces surface temperature by 36% (Figure 1).

A ceramic resistor chip was mounted on an FR4 card with a copper heat sink and power was supplied to the device. A FLIR SC645 thermal imaging system captured the thermal conductivity under ambient conditions captured the surface temperature of the device stabilise at approximately 150°C. A thermal jumper was introduced, connecting the ceramic resistor to the heat sink and retested at the same power level. The thermal imaging system showed the temperature had reduced to 95.5°C.

Vishay has published figures for the different case sizes, recording the best parameters of thermal conductance achievable for the 0606 (66mW°C), the 0805 (77mW/°C) and the 1225 (259mW/°C).

The ThermaWick Thermal Jumper surface mount chip is available in six surface mount case sizes and custom sizes are available on request.

A cap on heat costs

Fujipoly offers a range of Sarcon thermal interface caps which can be slid over transistors and other heat-generating components on the board. The company offers a selection of sizes of box-shaped caps to fit standard components and also has a custom service to produce caps to exact specifications. The cap dissipates unwanted heat away from the device to the surrounding areas or nearby heatsinks. The caps (Figure 2) are also available in a choice of thickness, depending on the application's power and cooling requirements, from 0.3 to 0.85mm. Thermal conductivity ranges from 1.1 to 1.7W/m°K and corresponding thermal resistance of 0.42 to 1.35°C-in2/W. The covers also protect against vibration and impact and provide electrical insulation for added reliability.

Networking demands

PCB materials and designs are increasingly under review for data services, as transceiver performance pushes onward and upward, running at 56 to 112Gb/s pulse-amplitude modulation 4-Level (PAM4), from the edge to the cloud. This consumes more power than non-return to zero

(NRZ) transceivers because more advanced equalisation is needed for operation.

A group of companies, including Broadcom, Cisco, II-VI, Intel, Juniper Networks, Marvell, Molex and Samtec are part of the Multi Source Agreement (MSA) group. This association of over 50 companies develops and promotes hardware specifications to ensure signal integrity and thermal performance in high-speed, double-density quad form factor pluggable modules to support 800Gb/s connectivity.

The MSA group has announced the Quad Small Form Factor Pluggable Double Density 800 (QSFP-DD800) transceiver form factor 1.0 specification, for modules which builds on QSFP-DD 5.0. The specification optimises transceiver pads to improve signal integrity for 100Gb/s per lane modules, without affecting backwards-compatibility. It defines a module, connector, stacked connector and a hybrid connector (a BiPass or Flyover version, which has raised ports) to minimise or eliminate signal losses on a traditional PCB (Figure 3).

The specification is backwards-compatible with QSFP-DD, QSFP28 AND QSFP+ modules and cables. The MSA says that it has been introduced to address 25.6Tb/s systems which support dense 100GbE or 400GbE interfaces.

Thermal technology

TE Connectivity has introduced thermal bridge technology, available in its cage assemblies for PCB connectivity.

It is claimed to provide up to two times the thermal resistance of traditional thermal technologies such as gap pads or thermal pads which require a spring mechanism or heavy force to compress the material for effective heat transfer. The company also argues that gap and thermal pads may degrade over time, meaning that more pressure has to be exerted to maintain performance levels.

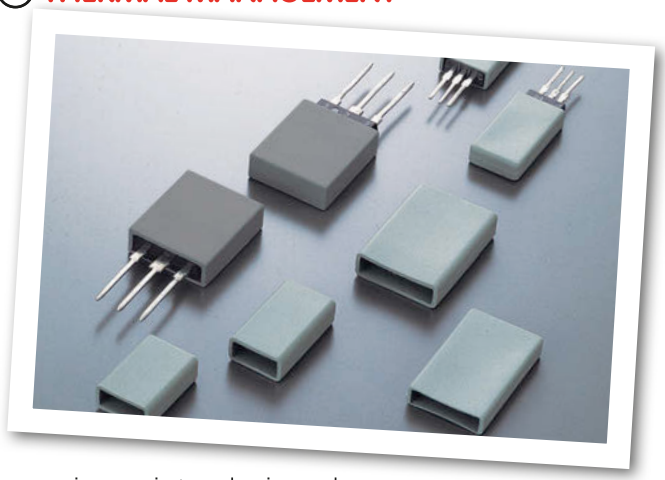

Figure 2: Sarcon thermal interface caps fit over heat-generating components on the board

Its thermal bridge technology is integrated into the company's 2358986-1 SFP+ cage assembly, the 2354751-1 (QSFP-DD form factor), and the 2359309-1, 2354935-1 and 2355519-1 QSFP28 form factor cage assemblies.

In this thermal bridge, interleaved, parallel plates allow heat to pass from the I/O module to the cooling area.

Mechanical springs provide the interface force. The spring loaded thermal bridge which offers 1.0mm (typical) z-axis compression and the dual-spring design tilts to conform in the y-axis. Individual plate actuation allows for surface conformability in the x-axis, says the company and there are three points of contact per plate for a total of over 150 pints of contact to an adjacent surface.

The use of a spring also increases reliability, says the company, as the elastic compression design is resistant to set and relaxation over time.

Rather than compression, the thermal bridge has to make contact with an I/O module and a cold plate or ganged heatsink to transfer the heat.

The thermal bridge has a near-zero plate gap for compressibility and thermal transfer, says TE. It is supplied, pre-assembled on I/O cage.

Packaging

Dense board design and its heat transference has also influenced the design of Texas Instruments' TPSM53604, a DC/DC buck module in a quad flat no-lead (QFN) package.

It has a single thermal pad to optimise heat transfer, which allows some flexibility in board mounting and layout. The QFN package footprint is designed in such a way that 42% of it touches the board, to increase the efficiency of heat dissipation at high ambient temperature compared to equivalent ball-grid array (BGA) packages, says the company.

The 36V, 4A power module's footprint is just 5.0 x 5.0mm which contributes to a reduction in size of the final power supply; it also reduces the power loss by 50% compared to similar modules, claims TI.

It operates at high temperatures, up to 105°C for efficient thermal management in harsh environments such as factory automation and control, the power grid infrastructure, test and measurement equipment, industrial transport, aerospace and defence projects. The company believes that the total area of 85mm2 for a single-sided layout is the smallest footprint for common 24V, 4A industrial applications, where space constraints can also influence design.

Other design features which meet the industrial market's demanding environment is that its integrated MOSFETs have low drain-source on-resistance (RDS(on)) for conversion efficiency of 90% at 24 to 5V. For EMI performance, the power modules uses integrated high-frequency bypass capacitors and no bond wires.

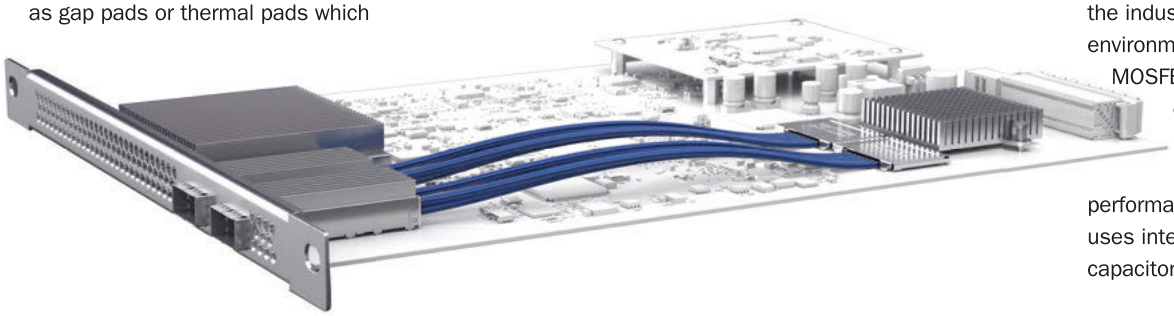

Figure 3: Samtec's Flyover QSFP-DD configuration.

EVER SMARTER HOMES

How is the fast-growing smart homes market evolving? **Johan Pedersen** looks at the rise of the ever smarter, smart home

Not so long ago, "smart home" meant an assortment of individual connected gadgets, from smart LED lights to HVAC controls to security cameras, that users could control from their smartphones.

Today, we're now seeing the growth of more interconnected ecosystems with smart home devices capable of listening to, instructing one another and even anticipating user preferences. Much of this consumer adoption is driven by the user-friendly voice interfaces of popular new smart speakers.

Consumers often buy Amazon Echo, Apple HomePod or Google Home smart speakers to play music and check weather forecasts and then incrementally add other connected devices to their home network such as smart lights and door locks, which can be controlled through voice commands.

According to a recent report by Navigant Research, global annual revenue from smart home platforms is forecast to grow from $3.2 billion in 2019 to $14.3 billion in 2028, achieving a compound annual growth rate (CAGR) of 18.1 percent.

A growing number of electronics companies are now involved in the burgeoning smart home market, delivering silicon and software solutions and working closely with a variety of equipment makers, communication protocol specialist interest groups (SIGs) and smart home technology alliances helping to shape today's smart home marketplace.

As 2020 progresses, it is possible to identify six key trends that are becoming increasingly important when it comes to the smart home.

Trend 1: The shift from "smart" to "intelligent"

"Smart" has traditionally meant being able to adjust your lights with a voice command or switch on your heating from your smartphone as you start your commute home. This level of 'smartness' was considered impressive, and people engaged with it easily. But it was only the first step on a bigger and far more exciting journey.

IoT devices are becoming more powerful, and intelligent. Form factors are shrinking. Communication protocol enhancements are delivering increased range and energy-efficiency. And consumers are adding more connected devices to their homes. All of this means there's a growing possibility – and indeed expectation – of greater sophistication, with multiple devices working together seamlessly and intelligently.

A simple example would be when you sit down with family or friends to watch a film. A single voice command would see the television and set-top-box switch on with the film poised to play, with window blinds coming down and lights dimming to create the cinema-like ambience you want. Expect more of these integrated experiences to become the norm.

Trend 2: Multiprotocol connectivity becomes more pervasive

When it comes to smart home connectivity, no one protocol dominates. There's good reason for this: Bluetooth, Wi-Fi, Zigbee, Z-Wave, Thread and proprietary networks all have different characteristics – and each has a role to play in IoT connectivity.

Device makers will continue to choose communication technology based on factors such as range, the number of devices they're connecting, power constraints, and indeed the protocols used by the smart home ecosystem(s) they want to integrate with.

This approach of using best-of-breed wireless technology is driving the need for multiprotocol connectivity. For example, Silicon Labs has developed wireless IoT solutions with dynamic multiprotocol connectivity capable of supporting Zigbee, Bluetooth and other protocol options.

Each protocol has its own requirements for latency and bandwidth, and the effective scheduling of communication is a key element to successfully making use of dynamic multiprotocol connectivity.

By designing with a single multiprotocol SoC, for example, the wireless subsystem bill of materials (BOM) can be reduced by up to 40 percent, the printed circuit board (PCB) design can be simplified, and potential interference between multiple radios is eliminated through using RF co-existence methods.

The resulting multiprotocol smart home products are more attractive to consumers, who'll no longer have to spend as long pouring over specs to make sure something will work with their setup. Going forward, we will see end products for the smart home begin to support multiprotocol connectivity, making it easier for consumers who don't have to worry about which protocol logo is on the box when purchasing new products. It will just work.

And this dovetails nicely with our next smart home trend…

Trend 3: Improving user experiences

Even if your device is the most capable piece of smart home product on the market, if the experience of installing and using it is poor, it's unlikely to succeed. We're seeing players in the market doing a lot to make the setup and operation of smart home devices as easy as possible. An example is the Z-Wave SmartStart commissioning system, which enables consumers to add new devices to their network simply by scanning a QR code.

Trend 4: Increased use of artificial intelligence

Ever-greater compute power is enabling smart home equipment makers to leverage the capabilities of machine learning closer to the device rather than solely in the cloud.

This migration of intelligence to the edge will have the benefit of reducing latency, thereby enabling the creation of more responsive and intelligent systems. It will also provide opportunities to enhance security and privacy by limiting the amount and type of data shared outside of the home.

Trend 5: Manufacturers helping device makers focus more on differentiation

Manufacturers of smart home devices have a vision of how they can use cutting-edge technologies to transform the way we live. Achieving this vision should be their number one focus, so that's why they're looking to spend more time innovating and differentiating, rather than getting into the nuts and bolts of component integration, wireless certification and the like.

As a result, smart home device makers increasingly are looking for silicon and software suppliers that offer development tools to standardize the design process across multiple communications protocols. These utilities make device designers' lives easier by taking care of the heavy lifting around energy profiling, configuration and connectivity optimization. As a consequence, it leaves more time for innovation, while also facilitating faster time-to-market.

"Today, we're now seeing the growth of more interconnected ecosystems with smart home devices capable of listening to, instructing one another, and even anticipating user preferences."

Trend 6: The need for ever-more-robust but low-impact security

No discussion of smart tech trends and the IoT is complete without delving into security. The need for security – from the device to the cloud – increases by the day as more connected devices collect more data, bad actors launch ever-more-sophisticated attacks, and tech-savvy consumers become more aware of these attacks and what's at risk in the connected home.

The challenge, of course, is to implement security without unacceptable impact on battery life, bandwidth, CPU usage and system cost. Securing the IoT requires a comprehensive, collaborative approach involving the entire ecosystem of silicon and software suppliers, wireless protocol SIGs, device manufacturers, IoT service providers and cloud companies.

For example, Silicon Labs' Z-Wave Security S2 technology redesigns the way Z-Wave security works, with the aim of creating a gold standard for smart home networks. It uses Elliptic-curve Diffie-Hellman cryptography and asymmetric key exchange. Crucially, its code footprint on the device is small, leaving space for manufacturers to add the features they want. S2 complements other optimised mechanisms for IP domains that enable Z-Wave services to implement end-to-end security.

It's an exciting time in the smart home marketplace. For those designing and manufacturing smart home products, the growing ease of network protocol interoperability and new tools to streamline development and improve user experiences mean they'll be able to create more compelling products more quickly.

And by extension, this is great news for consumers who'll benefit from the quicker pace of innovation, a broader choice of products and the beginning of true ecosystem interoperability that will make smart homes a reality in 2020 and beyond.

Author details: Johan Pedersen is smart home product marketing manager at Silicon Labs

SECURING THE THINGS

IoT is no longer a buzzword and these devices need protection. By **Elliot Mulley-Goodbarne**

With the IoT industry calling for common standards and infrastructure it's fair to say that the industry is very much in its infancy; certainly not mature anyway.

But with uncertainty comes fragmentation and with fragmentation comes vulnerability leading, more often than not, to headlines.

The Internet of Things has moved from a concept to a buzzword to tangible devices businesses and consumers can take advantage of. Be it cameras and sensors hooked up to AI computing to work out footfall in public spaces, or a range of Narrowband IoT devices such as cameras, trackers and sensors for consumers and enterprise – the trend is only going up.

Now that 5G has been added to the mix of connection protocols that include Wi-Fi, Bluetooth, 4G and Zigbee to activate these devices, the attack verticals for 'hackers' has also grown.

"Security often is an afterthought and sometimes it's almost as though it was never thought about at all" said Paul Ducklin, Senior Security Advisor at Sophos, "If you take kids' smartwatches, for example, they cost 20 bucks to buy, so you can imagine how much money is left over for security.

"But once the product is out in the market, it's too late to add security as an afterthought and that's a serious problem. We draw attention to this and people ask what they can do. We suggest that they should stop using it, because there's this massive bug that means anybody can figure out where your kids are and the device doesn't have any way of getting updated."

"I think a lack of competence is worse than security being an afterthought" added Bernard Parsons, CEO and Founder of Becrypt. "Many companies that are manufacturing IoT devices simply don't have the necessary levels of competence when it comes to security.

"There's no reason to believe that, because you're an IoT manufacturer, you're going to have the in-house expertise to do a good job of architecting security within your system. What is the driver for a manufacturer to go through the extra cost and time required to implement security even if they want to?

"I think this is where we have a situation which is best described as a market failure from a security perspective. There are two issues here, one is information asymmetry, where, as a buyer of IoT components, I can't tell the difference between good and bad so it's very difficult for me to differentiate between someone who's investing in security and somebody who isn't. That provides an advantage to the company that's not investing, as they go to market quicker and they'll be cheaper.

"The second issue is negative externalities, where the real losers in this are not the manufacturer or even the consumer; both parties could be happy because they got things cheaper because no one invests in security. But if a fridge, for example,

Nmedia, zinkevych/stock.adobe.com

becomes part of a huge botnet network, and we see a denial of service attack, then the people that lose out are third parties, whether it's Netflix, CNN or Twitter.

"When you have those characteristics within a market, it leads to market failure, and the only way that you can intervene and change that is through regulation."

Juggling standards

Security regulation is certainly a focal point for governments across the world but for IoT manufacturers, as Bernard points out, with investment in security comes higher component costs; hardly a reward for doing right by their end users.

Silicon Labs senior director of product marketing for IoT Security, Gregory Guez said that the motivation to add security may be found outside regulation.

"We're at a time where there's going to be a big shift with new security rules (SB327), where the State of California will mandate that all IoT connected devices need to come with reasonable security features. Things like making sure devices don't have universal passwords, executing trusted firmware, came into action at the beginning of the year.

"I think that's going to be a game changer. We are going to see some big lawsuits happening and companies who feel they can make a product without thinking about security are going to have to start taking it more seriously from the beginning of the design. It can no longer be an afterthought."

"The UK Government is looking to introduce guidelines that they want manufacturers to voluntarily sign up to. The National Cybersecurity Centre worked with the DCMS to come up with these secure by design principles that, if adopted by manufacturers, would move things forward quite substantially" added Parsons.

"To date, nothing has happened voluntarily, so we will now move through to an era of regulation and that's what will ultimately create the drive for the manufacturer to invest in security."

Securing the things

Experts agree that the best route of security is to install it at a physical level but reiterate that cost and profitability are big factors when manufacturing devices.

"The best way to maintain the integrity of a system is to have a hardware route of trust" added Parsons. "If you want to have a secure boot process in a platform where you can verify the firmware hasn't changed from a known good state, the only practice really that can withstand any reasonable attack is where you have a hardware-based route of trust.

"Within ARM based platforms, you're talking about TrustZone, while within Intel based platforms, its TPM (Trusted Platform Module). Ultimately it comes back to some fairly straightforward and basic good practices and a good starting point is that route of trusted hardware."

"If you look at connected home devices for instance, it has being growing so fast and a lot of people have been focused on time to market and releasing products rather than being concerned about security" said Guez.

"The lack of standards has been allowing companies to proceed without really taking security into consideration which has been really a tough battle for us." Gregory Guez

Security is often an afterthought, especially in inexpensive consumer devices

"The lack of standards has been allowing them to proceed without really taking security into consideration, and that's been a tough battle for us. "We would go to a customer and start talking about security but first there is a cost, because we integrate a lot of hardware that increases the price at the SOC level, but on top of that there is also a layer of complexity.

"If you're thinking about the consumer market, where everything is driven by time to market, I think security could actually delay your product, maybe by a few months or even longer. I think some companies have been worried they would lose out to their competitors, just because their product takes a longer time to be produced and released."

However, with a security hole still in hardware of devices, questions can also be asked of the systems that enable the vast majority of devices. As Duckin points out, there is more than one area where devices can be 'got at'.

"Sometimes the bugs or the problems are in the device, sometimes they're in the cloud service that the device uploads its data to, and sometimes they're in both.

"If the data being uploaded is being stored on a cloud server which is completely unprotected, once you've figured out where to look, what URL to go to, what endpoint, you could see the data by changing a number in the URL.

"That can be fixed but do you want to carry on trusting that cloud provider when they've made a blunder that big? The other problem is that there may be something fundamental about the device that means that, even if they harden the cloud service side, the device itself is still insecure."

High-fibre diet for a new generation

Mobile and fixed-network operators are looking to optical communications as the way to extend their gigabit coverage. By **Chris Edwards**

This year's MWC was meant to provide a showcase for the 5G network technology now making its way into the deployment phase. The mobile industry was keen to tout the benefits of the protocol over its predecessor. Lower latency and high bandwidth would power applications from virtual reality to robotics.

Such grand plans naturally attracted scepticism as technologies such as virtual reality have been through many false dawns and market acceptance does not look that much better than five years or a decade ago.

At the analyst's forecast meeting in London earlier this year, Future Horizons president Malcolm Penn pointed to 5G as one of the technology industry's regular problems of creating "a solution looking for a market". And yet, the cancellation of MWC may have provided 5G with the kind of boost it needs: a way to deliver effective tele-presence in an environment where people are suddenly forced to work remotely.

However, the telecom industry has a second problem. Gartner expects the premium that operators can charge over 4G to be just 10 per cent, a scant reward for a massive build-out. One answer may be for mobile to build closer links with the fixed-telecom world in a bid to upgrade the speed of home and office connections as governments such as the UK's push for gigabit broadband.

To help address the issue, ETSI kicked off a working group called F5G that seeks to build standards for a fibre-optic network that can both supplement 5G and help deliver the wireless service to more locations through the widespread deployment of much smaller cells.

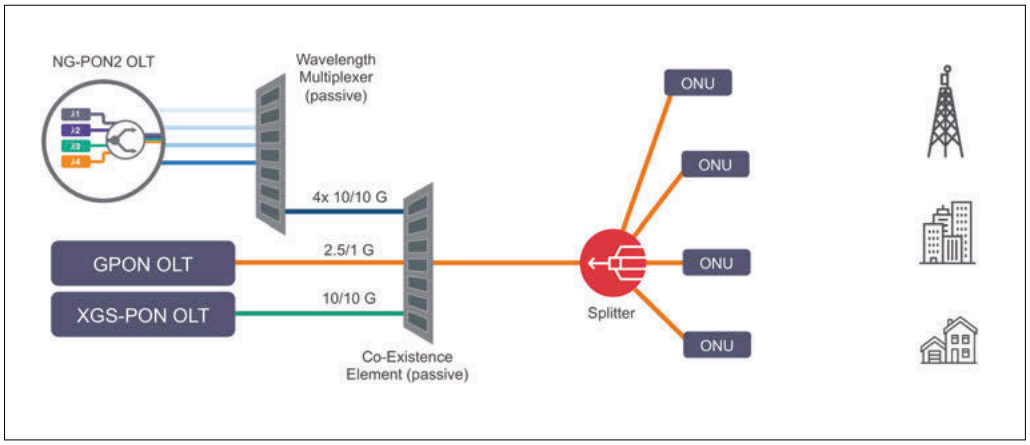

Above: Equipment vendors are suggesting that organisations which put the fibre in the ground will acquire a significant user base

F5G working-group chairman Luca Pesando, said: "We feel it's strongly needed. We need a base to match the pace of the mobile networks to have more services available and have a better reach for all users."

A problem identified by people such as Oğuzkağan Kanlıdere, senior architect for fixed-access networks at Turk Telecom, is that today the internet service providers and mobile operators are deploying infrastructure based on internally developed architectures with piecemeal use of existing standard protocols.

Such networks lack the economies of scale that comes with widespread standardisation as well as the ability for operators to work together in the way they could with a converged network architecture.

"There are many vendors, each with their own views of execution and all the ISPs have different views on execution. Standardisation is a must for fixed access networks," Kanlıdere argues.

ETSI's plan is to use a similar approach to standardisation as that employed for cellular.

"The evolution of mobile been characterised by generations. What about fixed networks? Well, it's been nothing like that. There are no formal generations. Rather there has been an evolutionary continuum. Nobody has ever spoken about what one generation or the next generation could be. And there are many standards bodies that work [in the field]. All of them do very good work but in an uncorrelated way and sometimes their activities are not so easy to coordinate."

Huawei ahead of the curve

Although the ETSI group has only started work formally in the past

few months, Chinese manufacturer Huawei has been promoting the idea of F5G for some time, and has put forward a proposal based around a mixture of fibre-optic fixed links and wireless-access based on WiFi 6 based on the IEEE 802.11ax protocol.

Sue Rudd, director of networks and service platforms at Strategy Analytics, says: "ETSI is creating F5G in order to coordinate inputs to multiple official standards bodies."

Those bodies include the 3GPP group responsible for the 5G releases, the ITU and IEEE, which have defined a number of the existing fibre and WiFi protocols and the Broadband Forum, which recently issued in the TR-470 standard its own architectural guidelines for a 5G infrastructure that handles traffic from both wireless and wired access networks.

The key to the deployment of the wired side, for the F5G group and others, is focused on a passive optical networks (PON) architecture in which signals passed through the underground fibre are handled using optical combiners and splitters rather than active electro-optical switches and routers. Deployment based on existing standards such as 1G PON has been patchy with penetration in many larger economies is only on a small scale.

However, one reason for expecting a more extensive deployment of a PON infrastructure around the world lies in the needs of 5G itself.

Equipment vendors such as Calix Communications argue organisations who put the fibre in the ground and offer access will acquire a significant user base not just from internet-service and TV providers but the 5G operators who need a way to connect millions of small-cell basestations. Splitters peel off optical signals from a trunk to direct fibre connection to groups of homes and pico-basestations.

That original 1G PON standard, now well over a decade old, has spawned numerous variants that have gone through the ITU process aimed at handling aggregate data rates of 10Gbit/s and higher. First came XG-PON, with 10Gbit/s downstream at the 1577nm wavelength and a 2.5Gbit/s upstream on 1270nm. XGS-PON boosts that upstream link to the full 10Gbit/s. In parallel, an IEEE working group created 10G EPON, which is superficially similar to 10G XGS-PON except that it supports either 1Gbit/s or 10Gbit/s upstream and is intended to be backward compatible with 1G PON for an easier upgrade by having 1Gbit/s and 10Gbit/s share the same channels using time-division multiplexing. The downside is a loss of aggregate bandwidth if the fibre is used for both.

The ITU has since added NG-PON2, which uses wavelength division multiplexing to offer handle multiple downstream and upstream channels in parallel, with support for more than four users through time-division multiplexing. Google extended the work in a different way for its so-called Super-PON, using a concept first proposed in the mid-1990s. It is aimed at connections as long as 50km with the help of fibre amplifiers in the delivery path. This option is primarily for greenfield deployments as it does not coexist with older PON equipment in the way that most of the other WDM options do. Huawei appears to favour the ITU options such as XG and XGS-PON in its equipment though the F5G group itself has not as yet specified a favoured option. Among the few chipset vendors with 10G offerings, Broadcom is hedging its bets with support for both the IEEE and ITU options.

More work to do

The work does not stop at 10Gbit/s. Huawei and others are working on 50Gbit/s extensions including a possible version that uses multilevel signalling over a single wavelength based on the same kind of technology that goes into high-speed ethernet.

Cost may prove to be a stumbling block for the higher-speed variants as, to handle coexistence on a passive network, the laser modules may need to be tuneable. Vendors are looking to silicon integration to help bring costs down though this will depend heavily on operators adopting the F5G or something similar.

At launch ETSI had a number of operators backing the F5G concept including several based in China with the remainder being mainly operators in Europe and the near East such as Altice Portugal, Bouyges Telecom and Turk Telekom. But there were no US operators. For F5G and the fibre-generations concept itself to become as influential as the mobile generations, the work will need far more acceptance among larger players. The cost savings promised by moving to a converged network may be enough to bring other players onboard. But there is still the chance that the F5G group may see competition from other groups who favour a different crop of protocols.

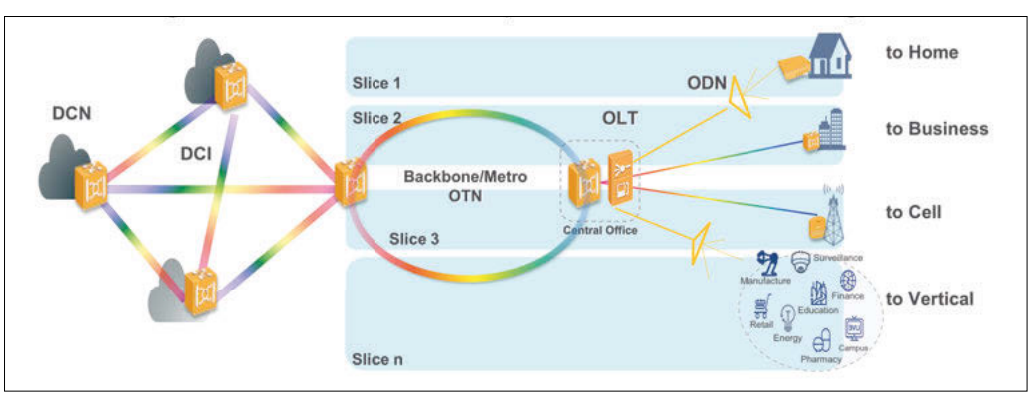

Below: Huawei has put forward a proposal based around a mixture of fibre-optic fixed links and wireless-access

Embedding Science in the Heart of Government

The Chief Scientific Adviser Sir Patrick Vallance argues that science needs to be embedded in government. By **Neil Tyler**

When the Chancellor announced in his budget plans to increase public R&D expenditure to £22bn by 2024/25, he greatly surpassed previous targets set by the Government and the Government's Chief Scientific Adviser Sir Patrick Vallance would have been excused for a allowing himself a moment of satisfaction.

While the UK has a reputation for being good at research, considering its size and relative levels of investment, it could certainly be doing a lot better at using this research strength to foster innovation.

When Sir Patrick gave the CaSE Annual Lecture at the Francis Crick Institute at the end of January, he made the point that while it was difficult to know what the right amount of investment was for R&D he made it clear that, "The UK currently underinvests, and needs to get to 2.4% of GDP and beyond in terms of research investment. It is clear that a mixture of public and private investment is required to reach this target, a fact that's been proven by other countries who have successfully increased their respective research intensities over the last few years."

CaSE Executive Director Dr Sarah Main described the increase in funding, seen in the budget, as 'supercharging public investment' in science in an announcement that went further and much faster than expected.

"Government has pushed hard to front-load public investment in the effort to boost the contribution of research and innovation to the UK economy and attract private R&D investment to follow.

"It's an ambitious program and a huge investment in a short period of time. It must be spent well to ensure that an R&D decade delivers real benefit for everyone in the UK."

Among the funding announcements were £800 million towards a new blue-skies funding agency to invest in high-risk, high-reward science, modelled on 'ARPA' in the United States; a £200 million investment programme with the British Business Bank towards health and life sciences innovation; £400 million for investment in research, infrastructure and equipment across the UK, particularly in basic research and physical sciences and a further £300 million for experimental mathematical research to attract global talent over the next five years.

Above: The Government's Chief Scientific Adviser, Sir Patrick Vallance

Science in government

Despite this welcome news there are significant problems when it comes to how science is viewed and used in government, according to Sir Patrick, and the theme of his talk at the Frick Institute was on how to embed science within government departments and to ensure that it played a role when it comes to decision making.

He referenced the coronavirus during his speech, but that was well before the issue became a global one turning into a pandemic. His argument about the role of science in government has been given far greater urgency in the light of recent developments.

"The UK currently underinvests, and needs to get to 2.4% of GDP and beyond in terms of research investment"
Sir Patrick Vallance

Sir Patrick began his talk by reflecting on some advice he had received from a senior civil servant before he took the role of GCSA, which was that although science has a presence in government, it is not universally present.

"There should be a much greater focus on embedding science across all government departments," explained Sir Patrick. "Economics, a social science, underpins all areas of government policy and science and research should be embedded in a systematic way. How we achieve that is the challenge going forward."

"Scientific issues have implications for practically every area of policy and there are all sorts of challenges from transport, renewable energy, and the ageing population, to security, emergency issues and housing," Sir Patrick explained.

This isn't a new view, however.

At the end of World War Two the importance of science in policy led to the creation of the 'scientific civil service' in 1945, while in the 1960s the then Prime Minister Harold Wilson's 'white heat of technology' saw the appointment of the first GCSA and the publishing of the Fulton report.

"In recent years we've seen the formation of UKRI which has enabled multidisciplinary opportunities, the creation of Chief Scientific Advisers who are now embedded in every government department and the size of the Science and Engineering Civil Service Fast Stream being doubled."

According to Sir Patrick, until the Government's recent budget announcement, there had been a rapid decline in departmental R&D expenditure outside key departments with protected research budgets.

"In some of the larger departments, R&D investment is now a fraction of 1% of total departmental budgets. The current situation regarding the use of science advice means there are pockets of government where science is embedded and is excellent, but this is greatly variable," Sir Patrick suggested.

He went on to make the point that it is easy for departments to say 'we are not a science department' as a rebuttal to doing more but that's no longer possible to argue, when there are so many challenges that need to be tackled by science.

"Issues such as genomics, which are inherently scientific, can have an impact with regard to education, employment, health and forensics which cross departmental boundaries," he explained.

Departments are now being compelled to publish Areas of Research Interest (ARIs) and the identification of these priorities is crucial in supporting research work across Whitehall.

Sir Patrick said that the Public Sector Research Establishments (PSREs), that can be found up and down the country, are underutilised and need to work more effectively with experts in business and industry in helping to solve cross-governmental issues.

"We need to be better at accessing expertise wherever it is in order to provide the best scientific advice," and Sir Patrick outlined the need to create better links with industry.

"PSREs should be better utilised for this, as they have great links to local communities and businesses."

Realising our ambitions

Sir Patrick discussed the newly published Government Office for Science report, 'Realising our ambition through science' and highlighted three crucial themes from the report.

"The first is building science capacity across the civil service, of which Chief Scientific Advisers (CSAs) are crucial when it comes to embedding science in departments, but it is also about having more people with science and engineering backgrounds in the civil service."

According to Sir Patrick just 10% of civil service fast stream entrants hold a STEM degree.

"We need much greater diversity of background to ensure more scientists work in Whitehall," and Sir Patrick said that scientific method was critical in the process of decision making. "It can be of real benefit to policy decisions."

He also raised the importance of ARIs as government is not always good at admitting what it does not know.

Below: The audience interacts with Sir Patrick Vallance

The third theme touched on by Sir Patrick was using all resources and accessing expertise wherever it is, to provide the best scientific advice.

Sir Patrick emphasised the need for better links with industry in helping to achieve the best possible access to expertise pointing to the role of PSREs.

"The government also needs synthesis of the best available evidence and evidence synthesis, I believe, needs to be recognised as an important research discipline."

According to Sir Patrick, by tackling these three themes of recruitment, ARIs and better use of all available resources, it would be possible to enhance science across all government departments.

"We need to improve systems in order to holistically and systematically solve problems across Whitehall."

He also warned that the strength of UK science was dependent on its international standing, and said that future immigration and collaboration would need to be maintained and made as easy as possible in order to ensure UK science and research got the resources and talent it needed.

Sir Patrick, who was speaking before the Budget, made it clear that a mixture of public and private investment was required in order to raise R&D as a percentage of GDP and he closed his lecture by saying that realising our ambitions through science would need research and science to be embedded across government.

"Behavioural science will be incredibly important in understanding how new technologies will be approached by the general public when changing personal habits and we need to engage with the public, that's critical.

"We also need to get the right skills in the civil service to help foster dialogue with the general public on scientific issues, and make communities feel included in scientific discussions."

efus™MX8X

www.mansky.co.uk

efus™MX8X is another compact and powerful module in efus™ form factor.

It is very well suited for safe cloud connections, industrial automation and control, HMI, robotics, building control, display audio, infotainment, and telematics applications

NXP i.MX 8DualX/QuadXPlus ARM® Cortex®-A35 + -M4

• Asymmetric Multiprocessing

• 2GB RAM, 512MB Flash, 64GB eMMC • 2x Gigabit Ethernet, WLAN/B

Another characteristic of the NXP i.MX 8X is its long availability up to 2028.

https://www.mansky.co.uk/products/embedded-solutions/embedded/all-solutions/

@: nw@mansky.co.uk
✆: +44 (0)1344 307733

New Lattice mVision Solutions Stack Accelerates Low Power Embedded Vision Development

www.latticesemi.com

Lattice Extends its Leadership in Delivering Complete, Easy-to-Use Solutions Stacks

Lattice Semiconductor Corporation (NASDAQ: LSCC), the low power programmable leader, today extended its position as a global provider of FPGA-based embedded vision solutions with the introduction of the Lattice mVision™ solutions stack. The complete solutions stack includes the modular hardware development boards, design software, embedded vision IP portfolio, and reference designs and demos needed to implement sensor bridging, sensor aggregation, and image processing applications. The Lattice mVision solutions stack accelerates and simplifies the implementation of embedded vision systems such as machine vision, ADAS, drones and AR/VR for the industrial, automotive, consumer, smart home, and medical markets.

Industry analyst firm Grand View Research forecasts the global machine vision market will reach over $18 billion by 2025.

@: Bob.Nelson@latticesemi.com
✆: +1 408-826-6339

Nexperia delivers first ESD protection device for USB4

www.nexperia.com

TrEOS diodes fully support USB4TM standard; devices feature low clamping, low capacitance, low leakage and very robust

Nexperia, the expert in discrete, MOSFET and GaN FET components and analog & logic ICs, today announced the PESD2V8R1BSF, industry's first ESD protection device dedicated for the USB4TM standard with industry-leading RF performance. Of special interest to engineers designing USB4TM and Thunderbolt interfaces, the new device uses Nexperia's TrEOS ESD protection technology with active silicon-controlled rectification. It delivers a winning combination of extremely low capacitance (down to 0.1 pF); extremely low clamping (dynamic resistance down to 0.1 Ω) and very high robustness against surge and ESD pulses (up to 20A 8/20 µs for very fast datalines). PESD2V8R1BSF comes in the ultra-low inductance SOD962 package.

Comments Stefan Seider, product manager at Nexperia: "To avoid signal integrity issues, the PESD2V8R1BSF ESD protection diode offers extremely low insertion loss figures of -0.21 dB at 10 GHz and correspondingly low return loss figures of -17.4 dB at 10 GHz. The new ESD protection device is suitable for the higher voltage requirements of USB 3.2.

@: petra.beekmans@nexperia.com
✆: +31 6 137 111 41

OMC's new hermetically-sealed FDE851HLBF infra-red fibre optic emitter

www.omc-uk.com

OMC's new hermetically-sealed FDE851HLBF infra-red fibre optic emitter optimises long-term reliability in challenging environments

Specialist 850nm device delivers signal integrity with high intensity beam.

OMC, the pioneer in optoelectronics design & manufacture, has released a hermetically-sealed 850nm fibre optic transmitter diode which delivers a high intensity output for coupling into multimode fibres even in challenging environments. Designed for applications where long term reliability is paramount, this device is highly specialised with very few similar products available on the market globally. It suits a wide range of fibre optic applications including datacomms, sensing, encoding, instrumentation and signalling, ensuring speed and integrity of signal over a long operating life.

The FDE851HLBF 850nm emitter features a hermetically-sealed TO-can body with glass optical window that helps protect the device internals from atmospheric conditions.

@: omc-sales@omc-uk.com
✆: +44 (0) 1209 215 424

Pickering Electronics launches smallest HV reed relay

www.pickeringrelay.com

Minimum 1500V stand-off; mini SIL/SIP packaging

Pickering Electronics, the reed relay company which has pioneered miniaturization and high performance for over 50 years, has launched industry's smallest high voltage relay. Housed in the miniture SIL/SIP package, new Series 131 reed relays have a footprint of just 12.5mm x 3.7mm and a height of 6.6mm and deliver a minimum stand-off of 1500V.

Featuring a choice of 3, 5 or 12 volt coils, with optional internal diode, Series 131 reed relays are available in the 1 Form A (energize to make) SPST N.O. configuration, and can switch up to 0.7 amps, 10 watts. Devices are ideal for cable testers, mixed signal/semiconductor testers, backplane testers, high voltage instrumentation, in-circuit test equipment or other HV applications.

@: poppy.moore@pickeringrelay.com
✆: +44 (0) 1255 428141

Power Integrations' SCALE-iDriver for SiC MOSFETs Achieves AEC-Q100 Automotive Qualification

www.power.com

Compact and robust isolated SiC MOSFET driver incorporates active clamping and <2 µs short-circuit turn-off time

Power Integrations (Nasdaq: POWI), the leader in gate-driver technology for medium- and high-voltage inverter applications, today announced that its SIC118xKQ SCALE-iDriver™, a high-efficiency, single-channel gate driver for silicon carbide (SiC) MOSFETs, is now certified to AEC-Q100 for automotive use. Devices can be configured to support gate-drive voltage requirements of commonly used SiC MOSFETs and feature sophisticated safety and protection features.

The SIC1182KQ (1200 V) and SIC1181KQ (750 V) SCALE-iDriver devices are optimized for driving SiC MOSFETs in automotive applications, exhibiting rail-to-rail output, fast gate switching speed, unipolar supply voltage supporting positive and negative output voltages, integrated power and voltage management and reinforced isolation. Critical safety features include Drain to Source Voltage (VDS) monitoring-, SENSE readout, primary and secondary Undervoltage Lock-out (UVLO), current-limited gate drive and Advanced Active Clamping (AAC) which facilitates safe operation and soft turn-off -under fault conditions.

@: peter.rogerson@power.com
✆: +1 (408) 414-8573

Pre-Switch demonstrates efficacy of AI-based soft switching using 200kVA inverter reference

www.pre-switch.com

Double pulse test data shows near-total elimination of switching losses

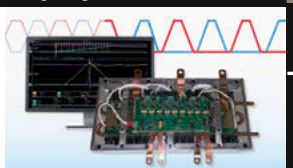

Pre-Switch, Inc., a Silicon Valley start-up that has developed the world's-first AI DC/AC, AC/DC soft-switching controller delivering efficiency and performance benefits to a wide range of applications including EVs and renewables, has released first data from its Cleanwave 200kW inverter reference. Double pulse test data demonstrates that the Pre-Switch soft-switching platform – comprising the Pre-Drive™3 controller board powered by the Pre-Flex™ FPGA, and RPG gate driver board – reduces total system switching losses by 90% or more.

Pre-Switch is enabling customers to build systems with switching frequencies 4X-5X faster than their hard-switched IGBT systems and 35X faster than their hard-switched SiC and GaN systems: this is achieved with half the transistor count. In the case of a SiC-based EV inverter, increasing the Fsw from the ubiquitous 10kHz up to 100kHz or 300kHz creates a near perfect sine wave without any output filter. The result is elimination of unnecessary motor iron losses and an increased motor efficiency at low torque and low RPM. Higher switching frequencies also enable higher RPM motors that are lighter and lower cost.

@: Bruce.renouard@pre-switch.com
✆: +1 408-209-3251

Tiny SoM delivers power of i.MX8 Mini with versatility of QNX OS

www.directinsight.co.uk

TRITON-TX8M module provides excellent graphics; Fully supported in the UK by Direct Insight

Direct Insight, the UK-based, technical systems integrator and reseller of system-on-module (SoM) and other embedded systems, has launched the TRITON-TX8M. The SODIMM-format SoM is based on NXP's powerful, extremely cost-effective i.MX8M Mini Quad ARM Cortex-A53 processor that features four 64-bit ARM Cortex-A53 cores running at up to 1.6GHz.

The tiny, 68mm x 26mm (LVDS version: 28mm) TRITON module comes with 1024MB or 2048MB DDR3L and a 4GB eMMC. A second core complex features an ARM Cortex-M4F microcontroller, and comprehensive graphics capabilities are provided by powerful 3D and 2D GPUs. The module provides a wide range of connectivity including Ethernet port, two USB 2.0 ports, MIPI-DSI display or alternate build with LVDS display, MIPI-CSI camera input, and many other interfaces. The i.MX8M Mini's VPU provides 1080p encode and decode functionality.

@: David.Pashley@directinsight.co.uk
✆: +44 (0)1295 768800